DIMENSIONS IN MILLIMETRES | DO NOT SCALE | REMOVE ALL BURRS AND SHARP EDGES | TOLERANCES ON MACHINING DIMENSIONS (UNLESS OTHERWISE NOTED) 0 TO 500 ± 0.5 , 500 TO 1000 ±1

FILENAME : 33218.dwg
PLOT VIEWS : ALL BUT 0

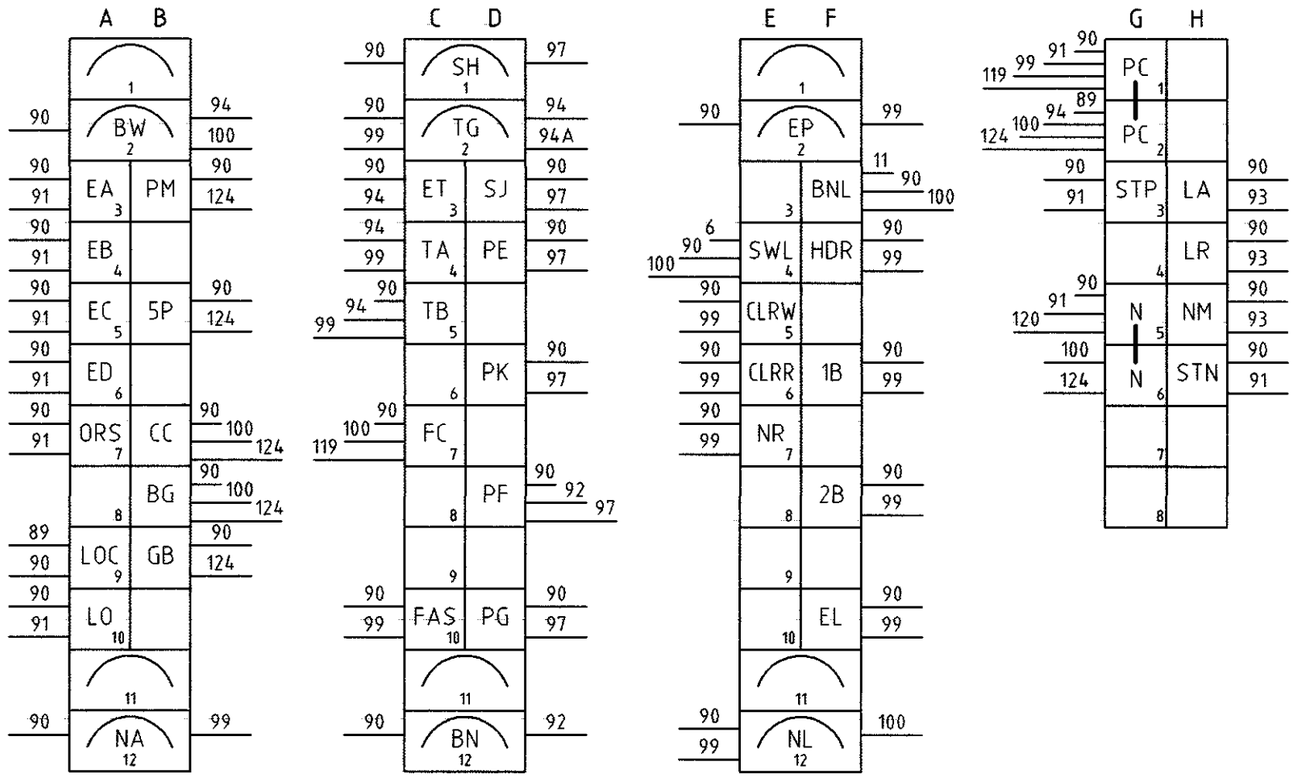

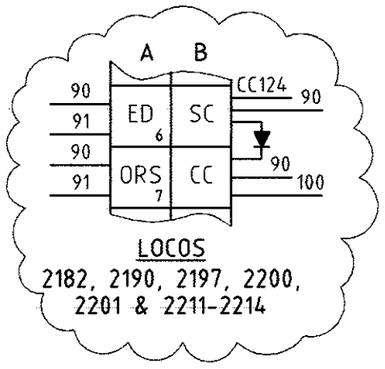

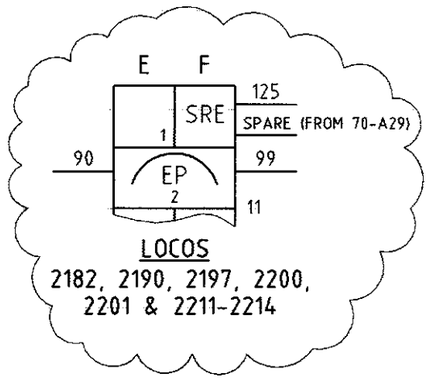

ENGINE ROOM TERMINAL BOARD TB90

ITEM	DESCRIPTION	ORDERING SIZE	QTY PER ASSY	SPECIFICATION

MRE W. THOMAS

QUEENSLAND RAILWAYS
OFFICE OF THE MANAGER ROLLINGSTOCK ENGINEERING

DIESEL LOCOS 2181-2214 (EXTENDED CAB)
TERMINAL BOARD 90 CONNECTION DIAGRAM

DRAWN	A BOYD	SCALE	REF.
CHECKED	19981117	A3-33218	
APPROVED	ICR		
DATE	20.11.98	REV.	

ASSY. DRG. | USED ON | CORRESP. | CHKD. | INIT'LS | DATE | ALTERATION | REV.

© QUEENSLAND RAILWAYS, 305 EDWARD ST, BRISBANE, Q. 4000. NO PART OF THIS DOCUMENT MAY BE REPRODUCED OR COPIED IN ANY FORM OR BY ANY MEANS WITHOUT THE WRITTEN PERMISSION OF QUEENSLAND RAILWAYS
DISCLAIMER. THIS DOCUMENT IS PRODUCED FOR QUEENSLAND RAILWAYS PURPOSES ONLY AND SHOULD NOT BE USED OR RELIED ON BY ANY PERSON OR CORPORATION. THIS DOCUMENT IS DISTRIBUTED ON THE BASIS THAT QUEENSLAND RAILWAYS EXPRESSLY DISCLAIMS ALL OR ANY LIABILITY AND RESPONSIBILITY TO ANY PERSON IN RESPECT OF ANYTHING DONE OR OMITTED TO BE DONE IN RELIANCE, WHETHER WHOLLY OR PARTIALLY, UPON ANY PART OF THE CONTENTS OF THIS DOCUMENT.