DIMENSIONS IN MILLIMETRES | DO NOT SCALE | REMOVE ALL BURRS AND SHARP EDGES | TOLERANCES ON MACHINING DIMENSIONS (UNLESS OTHERWISE NOTED) 0 TO 500 ± 0.5 , 500 TO 1000 ±1

FILENAME : 33176.dwg
PLOT VIEWS : ALL BUT 0

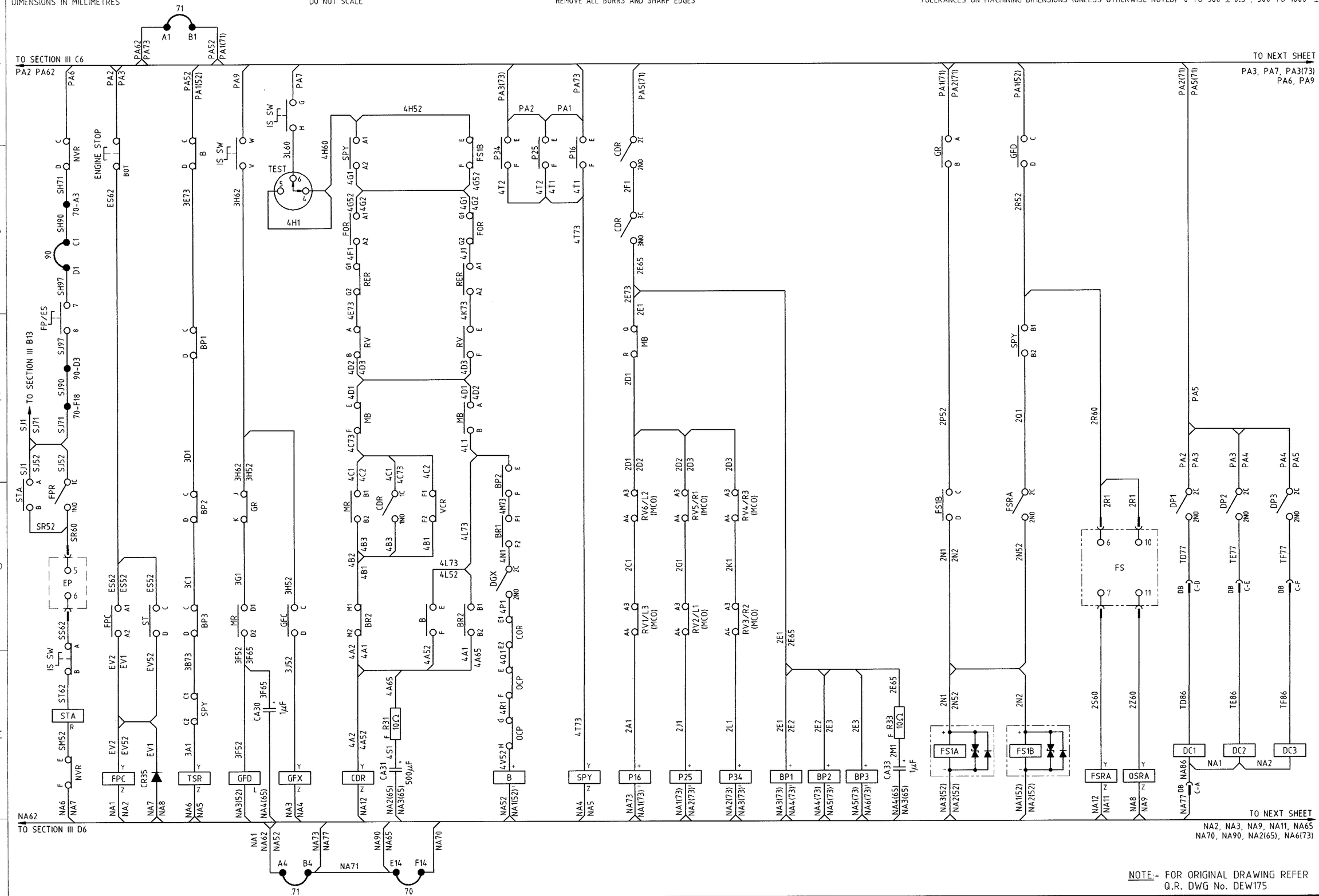

NOTE:- FOR ORIGINAL DRAWING REFER Q.R. DWG No. DEW175

© QUEENSLAND RAILWAYS 305 EDWARD STREET BRISBANE Q. 4000
NO PART OF THIS DOCUMENT MAY BE REPRODUCED OR COPIED IN ANY FORM OR BY ANY MEANS WITHOUT THE WRITTEN PERMISSION OF QUEENSLAND RAILWAYS.
DISCLAIMER. THIS DOCUMENT IS PRODUCED FOR QUEENSLAND RAILWAYS PURPOSES ONLY AND SHOULD NOT BE USED OR RELIED ON BY ANY PERSON OR CORPORATION. THIS DOCUMENT IS DISTRIBUTED ON THE BASIS THAT QUEENSLAND RAILWAYS EXPRESSLY DISCLAIMS ALL OR ANY LIABILITY AND RESPONSIBILITY TO ANY PERSON IN RESPECT OF ANYTHING DONE OR OMITTED TO BE DONE IN RELIANCE, WHETHER WHOLLY OR PARTIALLY, UPON ANY PART OF THE CONTENTS OF THIS DOCUMENT.

USED ON	ASSY. DRG.
	CORRESP.
	CHKD.
	INIT'L'S
	DATE
	ALTERATION
	REV.

ITEM	DESCRIPTION	ORDERING SIZE	QTY PER ASSY	SPECIFICATION

MRE W. THOMAS

QUEENSLAND RAILWAYS
OFFICE OF THE MANAGER, ROLLINGSTOCK ENGINEERING

DIESEL LOCOS 2181-2214 (EXTENDED CAB) PHYSICAL CIRCUIT DIAGRAM-LOCAL CONTROL GL26C-2 SECTION VI SHEET 1

SCALE	———
DRAWN	A BOYD
CHECKED	30/1998 1117
APPROVED	JCR
DATE	20.11.98

REF. A2-33176

REV.