DIMENSIONS IN MILLIMETRES | DO NOT SCALE | REMOVE ALL BURRS AND SHARP EDGES | TOLERANCES ON MACHINING DIMENSIONS (UNLESS OTHERWISE NOTED) 0 TO 500 ± 0.5 , 500 TO 1000 ±1

FILENAME : 33175.dwg
PLOT VIEWS : ALL BUT 0

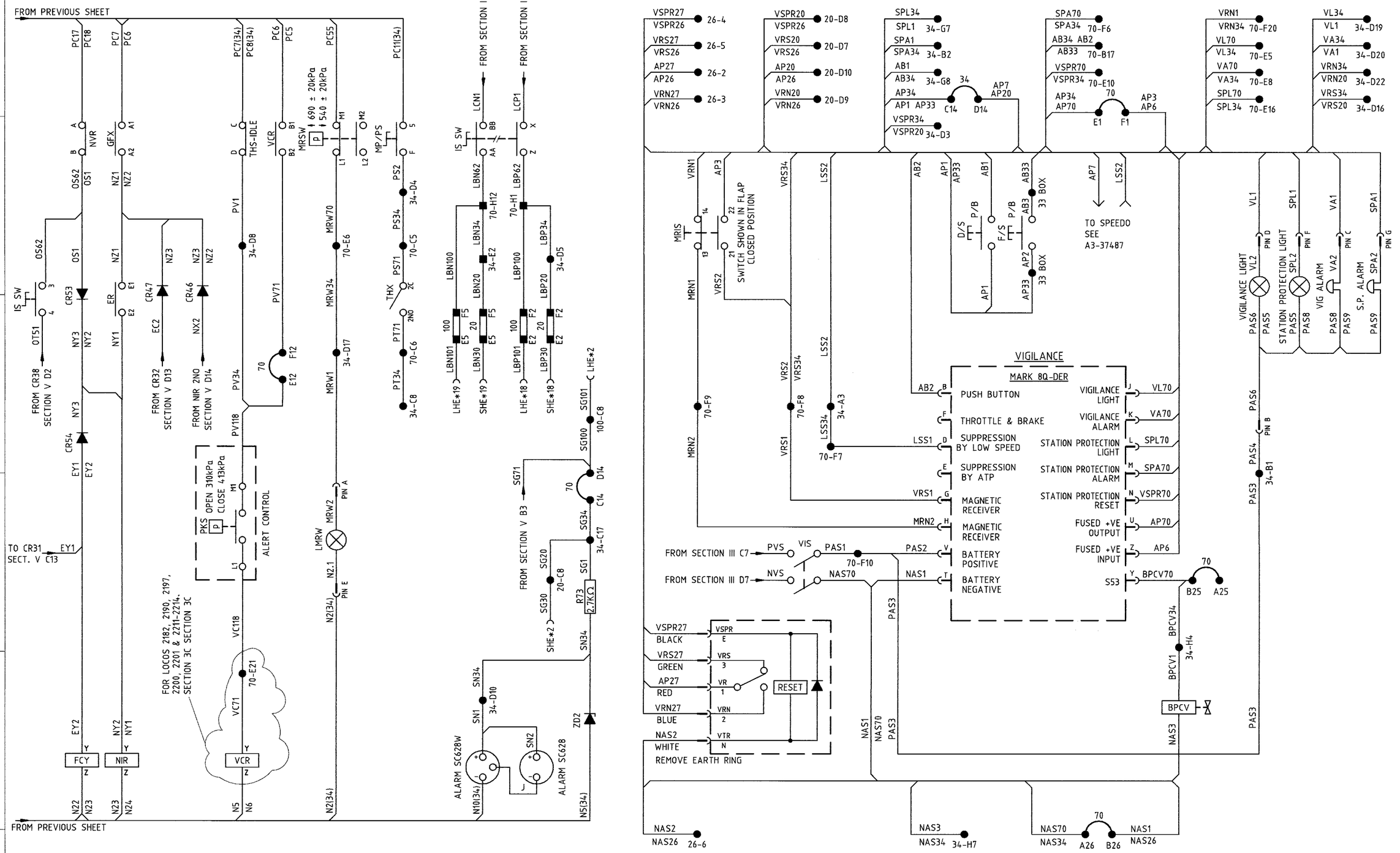

NOTE:- FOR ORIGINAL DRAWING REFER Q.R. DWG No. A2-DEW276

© QUEENSLAND RAILWAYS 305 EDWARD STREET BRISBANE Q. 4000.
NO PARTS OF THIS DOCUMENT MAY BE REPRODUCED OR COPIED IN ANY FORM OR BY ANY MEANS WITHOUT THE WRITTEN PERMISSION OF QUEENSLAND RAILWAYS.
DISCLAIMER. THIS DOCUMENT IS PRODUCED FOR QUEENSLAND RAILWAYS PURPOSES ONLY AND SHOULD NOT BE USED OR RELIED ON BY ANY PERSON OR CORPORATION. THIS DOCUMENT IS DISTRIBUTED ON THE BASIS THAT QUEENSLAND RAILWAYS EXPRESSLY DISCLAIMS ALL OR ANY LIABILITY AND RESPONSIBILITY TO ANY PERSON IN RESPECT OF ANYTHING DONE OR OMITTED TO BE DONE IN RELIANCE, WHETHER WHOLLY OR PARTIALLY, UPON ANY PART OF THE CONTENTS OF THIS DOCUMENT.

REV.	ALTERATION	DATE	INIT'LS	CHKD.	APPROV.	USED ON	ASSY. DRG.
A	SPEEDO & LOW SPEED CONTROLLER DETAILS & REF ADDED	20-2-03	SW	CFG	ICR		

ITEM	DESCRIPTION	ORDERING SIZE	QTY PER ASSY	SPECIFICATION

MRE W. THOMAS

QUEENSLAND RAILWAYS
OFFICE OF THE MANAGER, ROLLINGSTOCK ENGINEERING

DIESEL LOCOS 2181-2214 (EXTENDED CAB) PHYSICAL CIRCUIT DIAGRAM-CONTROL GL26C-2 SECTION V SHEET 3

SCALE	———
DRAWN	A BOYD
CHECKED	CFG
APPROVED	ICR
DATE	20-11-98

REF. A2-33175

REV. A