DIMENSIONS IN MILLIMETRES | DO NOT SCALE | REMOVE ALL BURRS AND SHARP EDGES | TOLERANCES ON MACHINING DIMENSIONS (UNLESS OTHERWISE NOTED) 0 TO 500 ± 0.5 , 500 TO 1000 ±1

FILENAME : 33168.dwg
PLOT VIEWS : ALL BUT D

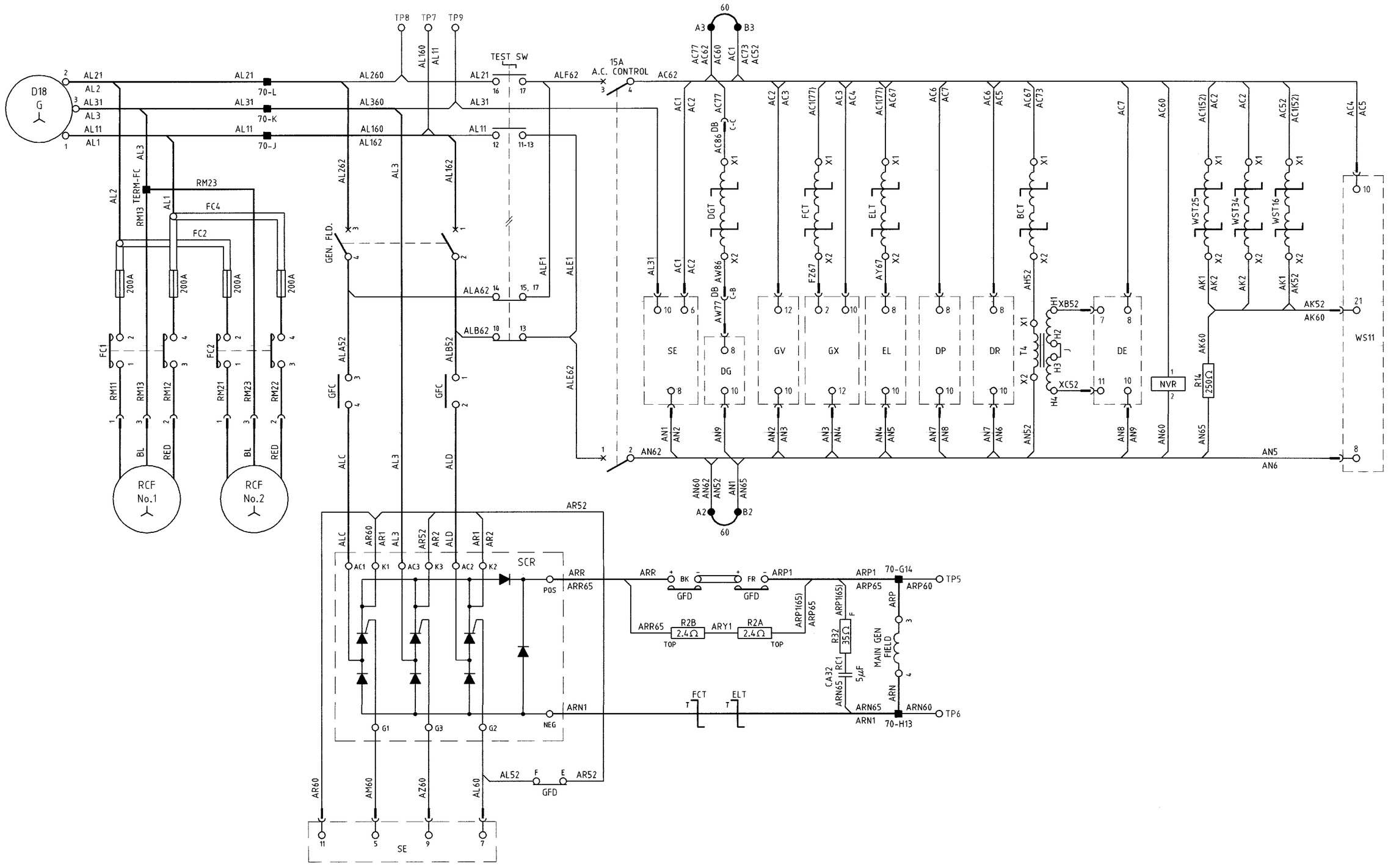

NOTE:- FOR ORIGINAL DRAWING REFER Q.R. DWG No. DEW168

© QUEENSLAND RAILWAYS 305 EDWARD STREET BRISBANE Q. 4000
NO PART OF THIS DOCUMENT MAY BE REPRODUCED OR COPIED IN ANY FORM OR BY ANY MEANS WITHOUT THE WRITTEN PERMISSION OF QUEENSLAND RAILWAYS.
DISCLAIMER. THIS DOCUMENT IS PRODUCED FOR QUEENSLAND RAILWAYS PURPOSES ONLY AND SHOULD NOT BE USED OR RELIED ON BY ANY PERSON OR CORPORATION. THIS DOCUMENT IS DISTRIBUTED ON THE BASIS THAT QUEENSLAND RAILWAYS EXPRESSLY DISCLAIMS ALL OR ANY LIABILITY AND RESPONSIBILITY TO ANY PERSON IN RESPECT OF ANYTHING DONE OR OMITTED TO BE DONE IN REPLIANCE WHETHER WHOLLY OR PARTIALLY UPON ANY PART OF THE CONTENTS OF THIS DOCUMENT.

ITEM	DESCRIPTION	ORDERING SIZE	QTY PER ASSY	SPECIFICATION

MRE W. THOMAS per

QUEENSLAND RAILWAYS
OFFICE OF THE MANAGER, ROLLINGSTOCK ENGINEERING

DIESEL LOCOS 2181-2214 (EXTENDED CAB) PHYSICAL CIRCUIT DIAGRAM-A.C. AUX. GL26C-2 SECTION II

SCALE	——
DRAWN	A BOYD
CHECKED	19981117
APPROVED	ICR
DATE	20.11.98

REF. A2-33168

REV.

ASSY. DRG. | USED ON | CORRESP. | CHKD. | INIT'LS | DATE | ALTERATION | REV.