ELECTRO-MOTIVE

MAINTENANCE INSTRUCTION

M.I. 4101
*Rev. B

FRACTIONAL HORSEPOWER MOTORS

INTRODUCTION

The fractional horsepower motors, Fig. 1, covered in this maintenance instruction are used in several different applications including: heater blowers, lubricating systems, and fuel pumping systems. A chart included under Service Data gives all appropriate information required to identify and overhaul each model motor.

All models feature sealed grease packed ball bearings that require no additional lubrication once assembled in the motor.

The following maintenance instructions cover the repair and rebuilding procedure and furnish information essential to place and keep fractional horsepower motors in dependable operating condition. Instructions pertain to all models: any dissimilarities for different models will be identified.

MAINTENANCE

Due to the critical duty required of these motors, inspections should be frequent. To ensure continuous trouble free operation perform inspections at intervals specified in the Scheduled Maintenance Program.

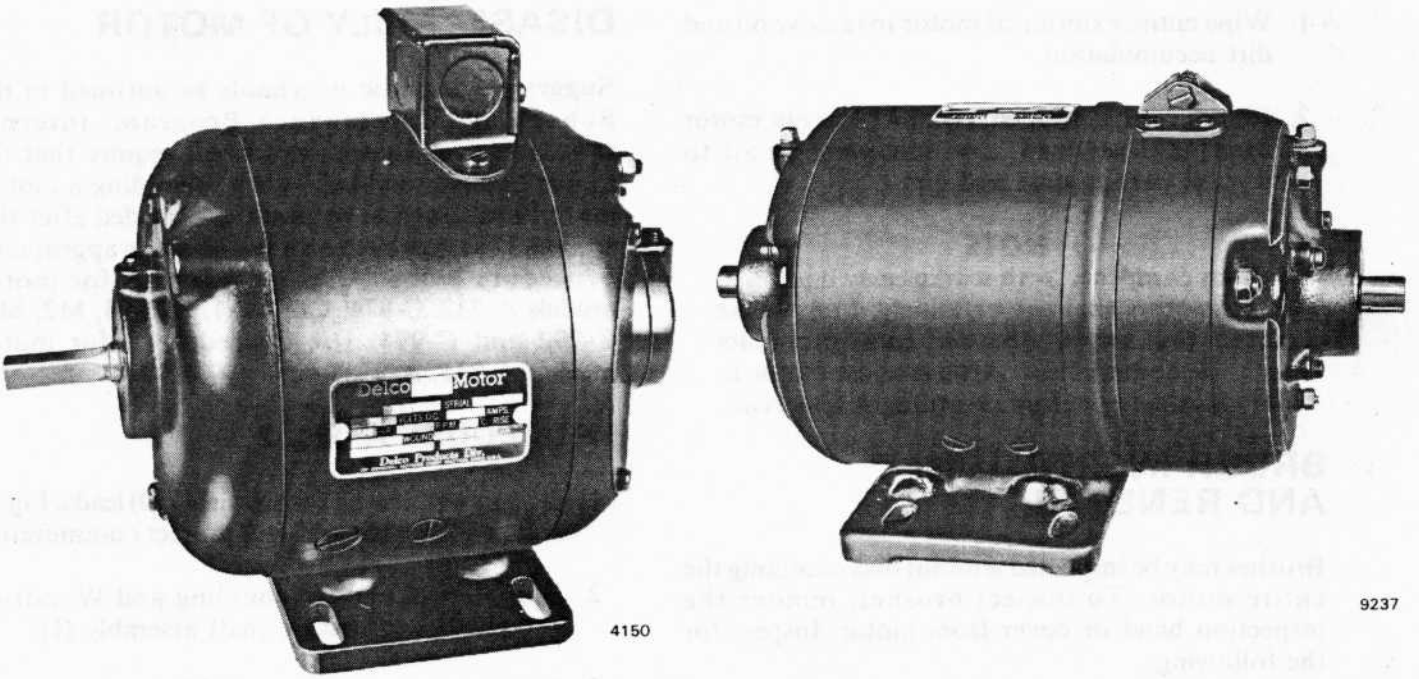

Fig.1 – Typical Fractional Horsepower Motors

*This bulletin is revised and supersedes previous issues of this number.

INSPECTION

The following inspections do not require that the motor be disassembled. A separate set of internal inspections is included following the Disassembly Of Motor section. These inspections require that the motor be disassembled completely.

1. Check tightness of coupling or connection between motor and the device it drives.
2. Check for freedom of rotation.
3. Make certain that electrical connections to the motor are clean, tight, and free of defects.
4. Using a megohmmeter, check for grounded armature and frame. If the reading is less than one megohm, disassemble motor and perform Internal Inspections that follow the Disassembly Of Motor section. Overhaul motor as required.
5. Inspect brushes as outlined under Brush Inspection And Renewal.

CLEANING

In addition to the above inspections, a thorough cleaning of the motor should be included in the routine maintenance operation. Perform the following cleaning steps:

1. Wipe entire exterior of motor to remove oil and dirt accumulation.
2. Remove inspection covers and blow out motor interior. Use clean, dry, low pressure air to remove carbon dust and dirt.

NOTE

A cloth dampened with solvent may be used to clean motors that are extremely dirty. Make certain that solvent does not come in contact with the commutator. Always allow motor to dry thoroughly before returning it to service.

BRUSH INSPECTION AND RENEWAL

Brushes may be inspected without disassembling the entire motor. To inspect brushes, remove the inspection band or cover from motor. Inspect for the following:

1. Freedom of movement – Brushes must be free to move up and down in the brush holder slots. Correct any binding or sticking.
2. Chips or cracks – Renew brushes if chipped or cracked.
3. Wear – Renew brushes if less than 19 mm (3/4").

To renew brushes use the following procedure:

1. Remove inspection covers or band from motor.
2. Disconnect brush leads and remove brushes.
3. Install new brushes.
4. Sand-in new brushes by placing a strip of No. 00 grade sandpaper sand side up on the commutator under the brushes. Rotate the armature in the direction of normal rotation until brushes conform to the contour of the commutator.
5. Remove carbon dust and dirt with clean, dry, low pressure air.
6. Check brush spring force. Replace springs that do not meet minimum brush force listed under Service Data.

NOTE

If brushes squeal during operation they should be sanded-in. Never lubricate the commutator.

DISASSEMBLY OF MOTOR

Suggested periodic overhauls as outlined in the Scheduled Maintenance Program, internal inspections, or motor failures all require that the motor be disassembled. When rebuilding a motor, perform all Internal Inspections included after this section. Disassemble motor by following appropriate procedure below. Use Procedure A for motor models A-732, C-974, C-974-A1, A2, A3, M2, M3, C-992 and C-994. Use Procedure B for motor models A-731, A-9385, and A-9385-A1.

PROCEDURE A, Fig. 2

1. Disconnect brush (19) and field (20) leads, Fig. 2. Remove brushes (18) and protect commutator.
2. Loosen and remove coupling and Woodruff key (2) from armature shaft assembly (1).
3. Remove inspection covers (17) from motor.
4. Remove conduit box cover (15) and conduit box (16).

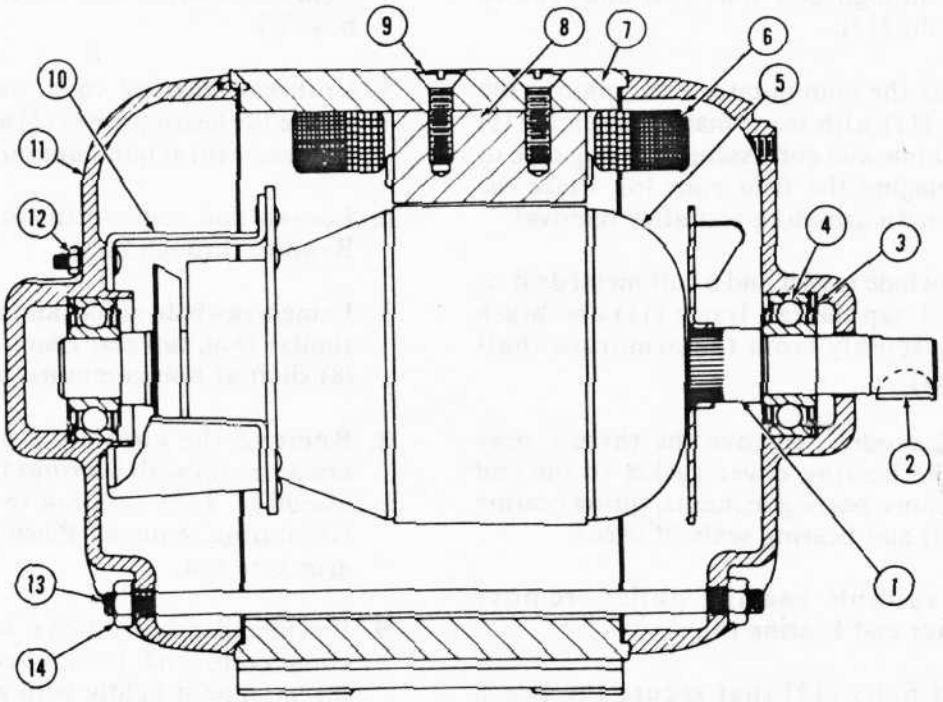

1. Armature Shaft
2. Woodruff Key
3. Spring Bearing Washer
4. Sealed Bearings
5. Armature Assembly
6. Field Coils
7. Motor Frame
8. Pole Piece
9. Pole Piece Screw
10. Brush Bracket Assembly
11. End Frame
12. Brush Bracket Bolt
13. Through Bolt
14. Through Bolt Nut
15. Conduit Box Cover
16. Conduit Box
17. Inspection Cover
18. Brushes
19. Brush Leads
20. Leads

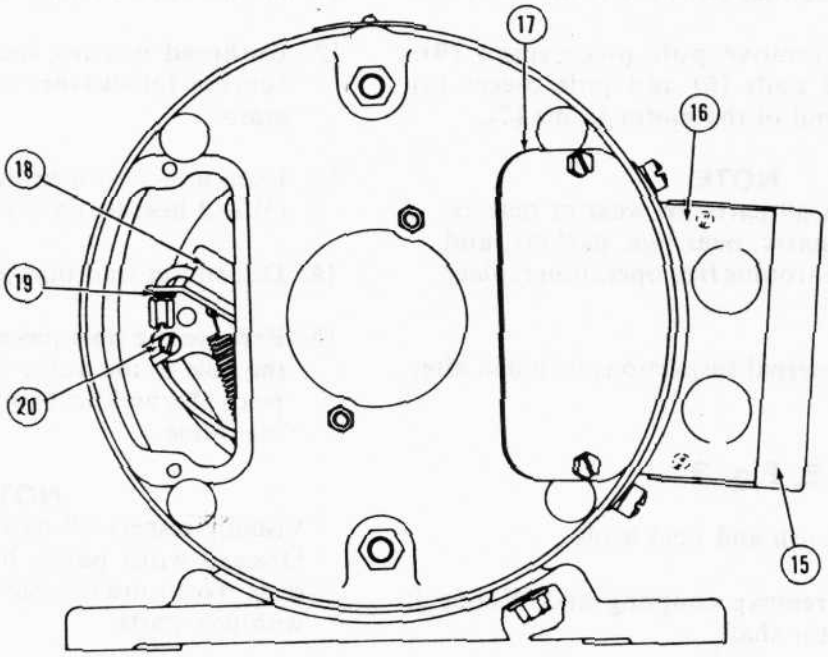

20914

Fig.2 – A-732, C-974, C-974-A1, A2, A3, M2, M3, C-992, and C-994 Models

5. Unthread through bolt nuts (14) and remove through bolts (13).

6. Working at the commutator end, remove the end frame (11) with the armature assembly (5) from the frame and coil assembly, using care to avoid damaging the field coils (6). Place the armature in an armature rest after removal.

7. Using a rawhide mallet and a soft metal drift or similar tool, tap the end frame (11) and brush bracket assembly from the armature shaft assembly (1).

8. On A-732 models, remove the three screws holding the bearing cover gasket to the end frame. Remove bearing locknuts, spring bearing washers (3) and bearing seals (if used).

9. Using a suitable bearing puller, remove commutator end bearing (4).

10. Unthread bolts (12) that secure the brush bracket assembly (10) to the end frame (11). Remove the end frame.

11. Remove the brush bracket assembly and the opposite commutator end bearing.

12. Disconnect lead that joins the field coils (6).

13. Loosen and remove pole piece screw (9). Remove field coils (6) and pole pieces (8) through one end of the motor frame (7).

NOTE

Visually inspect all parts for wear or defects. Discard worn parts, bearings, gaskets, and seals. To ensure trouble free operation replace with new parts.

14. Perform all Internal Inspections included after this section.

PROCEDURE B, Fig. 3

1. Disconnect brush and field leads.

2. Loosen and remove coupling and Woodruff key from motor shaft.

3. Remove inspection band (11), Fig. 3, from motor.

4. Remove conduit box cover (22) and conduit box (23).

5. Unthread bearing cover cap screws (2) that secure the bearing cover (1) and gasket (7) to the end frame (6) at non-commutator end of motor.

6. Loosen and remove through bolt nuts (12). Remove through bolts.

7 Using a rawhide mallet and a soft metal drift or similar tool, tap end frame (6) from armature (8) shaft at non-commutator end.

8. Remove the commutator end frame and armature (8) with bearings from frame and coil assembly. Take care not to damage field coils (19) during removal. Place the armature in an armature rest.

9. Unthread and remove cap screws (2) at commutator end. Remove end frame from shaft (8), tapping it lightly with a rawhide mallet or similar tool.

10. Unthread bolts (18) that secure the brush bracket assembly (13) to end frame and separate the two.

11. Remove all bearing seals (4) where used.

12. Unthread bearing locknut (17) and remove bearing lockwasher (16) from both ends of motor.

13. Using a suitable bearing puller, remove bearings (5) and bearing covers (1).

14. Disconnect lead that joins the field coils (19).

15. Remove the pole piece screws (21) which hold the pole to the frame (10) and remove the pole piece (20) and field coil (19) through the end of the frame.

NOTE

Visually inspect all parts for wear or defects. Discard worn parts, bearings, gaskets and seals. To ensure trouble free operation replace with new parts.

16. Perform all Internal Inspections included after this section.

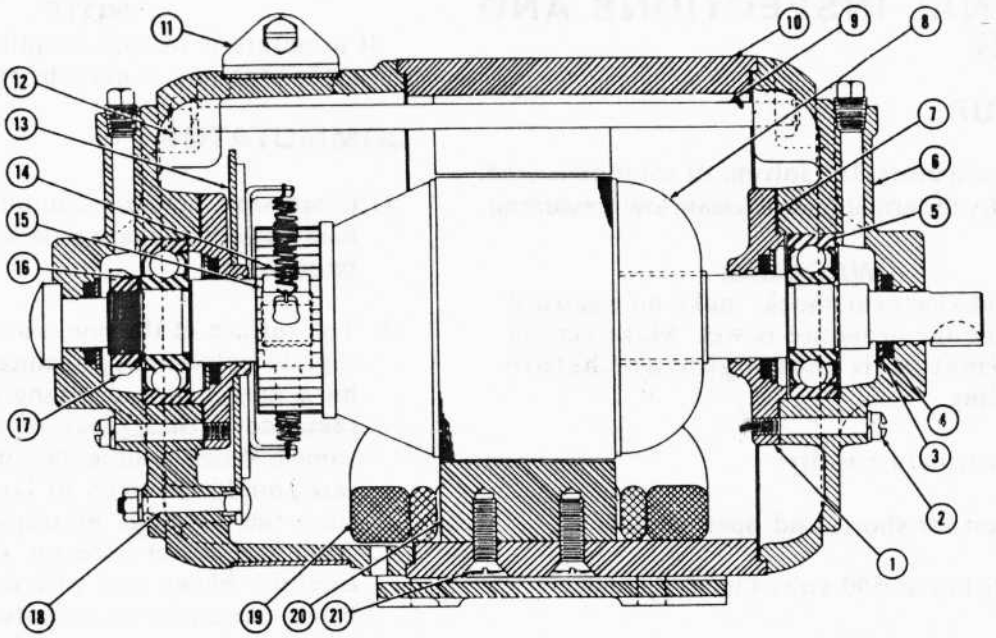

1. Bearing Cover
2. Cap Screw
3. Expansion Plug
4. Felt Seal
5. Ball Bearings
6. End Frame
7. Gasket
8. Armature
9. Through Bolt
10. Motor Frame
11. Inspection Band
12. Through Bolt Nut
13. Brush Bracket Assembly
14. Brush Spring
15. Brush With Hook
16. Bearing Lockwasher
17. Bearing Lock Nut
18. Brush Bracket Bolt
19. Field Coil
20. Pole Piece
21. Pole Piece Screw
22. Conduit Box Cover
23. Conduit Box

20863

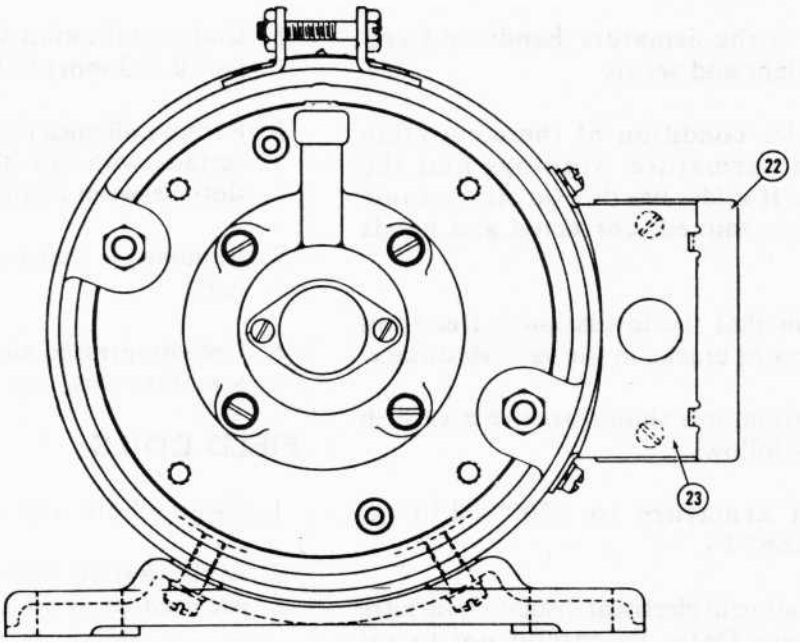

20864

Fig.3 – A-731, A-9285 and A-9285-A1 Models

INTERNAL INSPECTIONS AND REPAIR

ARMATURE

1. Clean armature. If a solvent or solution is used, blow dry the armature with clean, low pressure air.

WARNING

To avoid electrical shock, make no electrical test while the armature is wet. Make certain that armature is thoroughly dry before proceeding.

2. When armature is dry:

   a. Test for shorts and open circuits.

   b. Hi-Pot at 500 volts for 10 seconds.

NOTE

Replace armature if it fails the above tests.

3. Visually inspect armature shaft diameter for abnormal wear conditions. Replace if not within drawing tolerance.

4. Make close inspection of armature for condition of coils, commutator, and the general assembly.

5. Make certain the armature bands and coil wedges are tight and secure.

6. Inspect solder condition at the connection between the armature windings and the commutator. If solder has thrown off, the cause should be determined, corrected and bands replaced.

7. Make certain that the insulation is free from blisters, flakes or cracks in the varnish surface.

8. All service armatures should receive a varnish treatment as follows:

   a. Preheat armature to 120° - 130° C (248° - 266° F).

   b. Dip armature in electrical insulating varnish, see Service Data. Be careful not to get varnish on the commutator.

NOTE

Before placing armature in oven, wipe varnish from shaft.

   c. Bake armature in an oven set at 160° C (320° F) for four hours.

NOTE

If armature is in such condition it cannot be readily repaired, it must be replaced.

COMMUTATOR

1. Clean slots between commutator bars. If any bars are loose or raised the commutator should be scrapped.

2. The surface of the commutator should have a slightly polished appearance. Minor pitting or burn marks due to arcing at brushes can be removed with a piece of fine sandpaper or stoned. When stoning the commutator, extreme care should be taken to keep the copper dust from the windings by using a suitable sheild. After stoning or sanding, the dust should be carefully blown our with dry compressed air. Never use emery or carborundum.

3. If the commutator is badly worn, pitted, or burned,machine it to obtain a uniform surface. See Service Data for repair limits.

4. Check commutator concentricity with a dial indicator. Surface should be a true cylinder and concentric within 0.025 mm (.001") total indicator reading.

5. Undercut the mica area between the commutator bars 0.793 mm (.0312") x 0.76 mm (.030") wide.

6. Remove all mica fins and polish the commutator surface with No. 00 grade sandpaper. Clean slots between commutator bars.

7. Remove all sharp edges from the commutator bars.

8. Use compressed air to blow all debris from the armature windings.

FIELD COILS

1. Clean all dirt and oil from the field coils.

2. Make certain that coil leads and connections are secured and all taping is intact.

3. Renew coils when insulation is charred or brittle. See Step 2a. under Assembly Of Motor for proper wiring.

NOTE

On Models C-794 the old lead grommet 41808 should be replaced with grommet 4953084 to prevent water from entering the motor,

4. If only leads need replacement, the whole lead that starts within the coil should be spliced and soldered to the coil. For proper wire and terminal clip, refer to appropriate field coil assembly drawing. For flux and solder used, refer to the Service Data section of this Instruction.

5. Replace insulation and tape on coil and varnish treat.

6. Check resistance of field coils. See Service Data.

MISCELLANEOUS PARTS

In addition to the armature, commutator and field coils treated above all other parts must be cleaned and inspected. If they do not conform to drawing specifications, they must be repaired or replaced. All parts not replaced must be painted, if they were originally painted. Use red air-drying enamel listed in the Service Data section of this Instruction.

ASSEMBLY OF MOTOR

The motor should be assembled in the reverse order of disassembly. The following steps and precautions should be taken during assembly.

NOTE

On all serviced motors, certain parts are not to be re-used, but always replaced with new parts as listed in Note under "Disassembly of Motor."

Use the following procedure to assembly all model motors, referencing the appropriate drawings:

1. For proper coil polarity, reconnect coils as shown in Fig. 4.

2. Place armature in motor frame.

3. For models A-731, A-9385, A-9385-A1, and all other motors with double shielded bearings, and for Model A-732, and all other models with single shielded bearings, apply 14.18 g (.5 ounce) of Chevron SRI-2 grease, see Service Data, in the cavity that will surround the shielded side of each bearing.

   Models C-974, C-974-A1, A2, A3, M2, M3 and all other models with double sealed bearings do not require additional grease application when reassembling the motor.

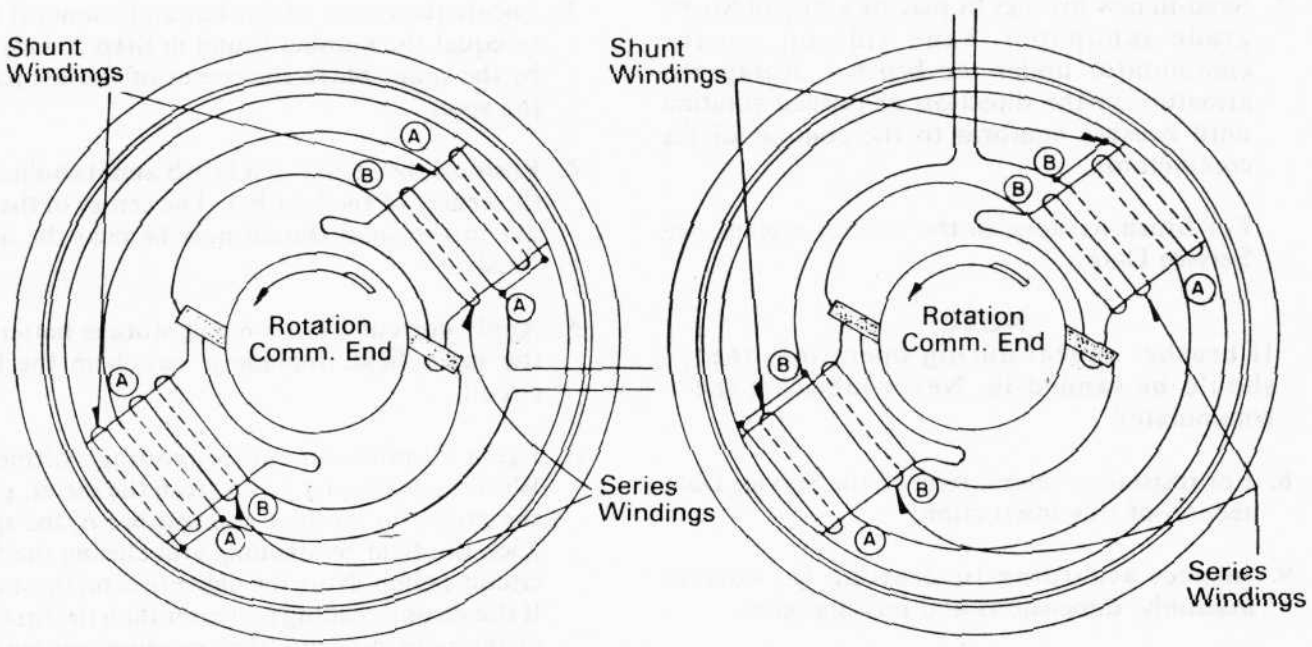

Models A-732, A-9385 and A-9385-A1

Models A-732, C-974, C-974-A1, A2, A3, M3, C-992 and C-994

NOTE

Leads marked A leave coils on coupling end of motor.
Leads marked B leave coils on commutator end of motor.

2191

Fig.4 – Connection Diagrams

NOTE

End frames 5322176 which are satisfactory for reuse should be worked to drawing 4953130 to take shaft seal 5353882. End frames that are not satisfactory should be replaced by 4953130 and Shaft Seal 5353882. The seal is necessary to prevent water from entering the shaft end bearing.

4. Install new bearing seals, bearing washer, expansion rings, and bearings.

NOTE

When installing the bearing, tap gently on the inner race only, to avoid damaging the bearing.

5. Some older motor end frames may have tapped holes for grease fittings. Permanently seal these holes with pipe plugs.

6. When mounting the brush bracket, a notch in the bracket must be lined up with the notch in the end plate. If the notches cannot be located, brushes must be set for kick neutral. See Brush Setting section for procedure.

NOTE

If either the armature or the end plate has been renewed, the brushes must be set for kick neutral. See Brush Setting section for procedure.

7. Sand-in new brushes by placing a strip of No. 00 grade sandpaper, sand side up, on the commutator under the brushes. Rotate the armature in the direction of normal rotation until brushes conform to the contour of the commutator.

   For brush tensions in the various models, see Service Data.

NOTE

If brushes squeal during operation, they should be sanded-in. Never lubricate the commutator.

8. For resistance values, refer to the Service Data section of this Instruction.

9. Inspect according to drawing for correct assembly, dimensions and missing parts.

10. Inspect for free movement of motor shaft and all other moving parts.

11. Inspect for security of mounting of all parts, ensuring adequate clearance of all electrical parts.

12. Inspect for correct alignment of brushes. Refer to Brush Setting Section for procedure.

13. Hi-Pot assembled motor using 400 volts AC for one second.

14. Connect correct voltage to motor and check rotation of armature. Rotation should be counterclockwise viewed from the commutator end.

15. Paint exterior frame and housing with gray enamel.

BRUSH SETTING (KICK NEUTRAL)

Having reassembled the motor, in some cases it will be necessary to set the brushes with respect to electrical neutral. When necessary, use the following procedure to check or set brush position:

1. Lift all brushes off the commutator.

2. Count the number of commutator bars and main field poles. Divide the number of commutator bars by the number of main field poles.

3. Locate the center of one bar and count off bars to equal the number found in Step 2. This will be the span. Mark the center of the last bar in the span.

4. Position the center of a brush and its holder on the center of the first bar. The center of the last bar in the span should now be near the other brush.

5. Apply current from a 6 volt storage battery to the main field. Include a switch in the field circuit.

6. Use a 50 millivolt center reading voltmeter. With the leads and prods from the meter, place the prods on the first and last bar of the span. Kick the field by opening and closing the field circuit switch. Note the deflection on the meter. If the second reading is greater than the first and of the same polarity, the armature was rotated in the wrong direction. If the meter shows a deflection of the opposite polarity, the neutral point has been passed. Follow the above pattern of rotating the armature until the deflection of the meter is zero or as near zero as possible.

7. Hold the armature in this position and rotate the brush bracket so that the center line of the first brush lines up with the first bar center and the second bar center lines up with the other brush center. Work to ± .4 mm (1/64") of location setting.

8. A recheck should be made of kick neutral after moving the brush bracket to make certain the armature did not move.

Apply proper voltage to the motor and check for proper rotation. Rotation should be counterclockwise when viewed from the commutator end.

SERVICE DATA

SPECIFICATIONS

MODEL	POWER	DC VOLTS	RPM	BRUSH FORCE NEW	BRUSH FORCE WORN	BRUSH LENGTH	RESISTANCE OHMS @ 25° C (77° F) SHUNT FIELD	SERIES FIELD	ARMATURE*	AIR GAP
A-731**	0.187 kW (.25 hp)	64	1100	411.1 g (14.5 oz)	212.6 g (7.5 oz)	19 mm min. (3/4" min.)	69-76	.1346-1487	1.19-1.31	0.79-0.94 mm (.031-.037")
A-732	0.119 kW (.16 hp)	72	1350	269.3 g (9.5 oz)	113.4 g (4 oz)	19 mm min. (3/4" min.)	340-380	.31-.344	2.43-2.70	0.69-0.79 mm (.027-.031")
A-9385** A-9385-A1** C-974 C-947-A1 C-974-A2 C-974-A3 C-974-M3	0.187 kW (.25 hp)	64	1100	411.1 g (14.5 oz)	212.6 g (7.5 oz)	19 mm min. (3/4" min.)	125-145	.132-146	.75-.88	0.79-0.94 mm (.031-.037")
C-974-M2	0.187 kW (.25 hp)	28	1200	311.9 g (11 oz)	141.8 g (5 oz)	19 mm min. (3/4" min.)	10.3-22.5	.0177-.0196	.118-.130	0.79-0.94 mm (.031-.037")
C-992	0.187 kW (.25 hp)	120	1200	311.9 g (11 oz)	141.8 g (5 oz)	19 mm min. (3/4" min.)	520-580	1.37-1.52	2.05-2.38	0.79-0.94 mm (.031.037")
C-994	0.56 kW (.75 hp)	74	1200	411.1 g (14.5 oz)	141.8 g (5 oz)	19 mm min. (3/4" min.)	167-186	.106-.118	.450-.495	0.79-0.94 mm (.031-.037")

*Measured Between Opposite Bars
**Obsolete

COMMUTATOR CONDEMNING LIMITS (All Models)

Outside Diameter (all model fuel pump motors) . . . . . 67.5 mm (2-21/32")
Outside Diameter (A-732) . . . . . 43.6 mm (1-23/32")
Neck Width . . . . . 2.8 mm (7/64")
Runout (Total Indicator Reading) . . . . . 0.03 mm (.001")

MATERIALS

Solder, 0.68 kg (1-1/2 lb) bar 8225762
Flux, Paste Type, 0.45 kg (1 lb) can 8122570
Varnish, Electrical Insulating – Modified
Polyester Y-432, 208 Litres (55 Gal.) 8489774
Thinner, Xylol
3.8 Litres (1 Gal.) 8098692
18.9 Litres (5 Gal.) 8122139
208 Litres (55 Gal.) 8089758
*Thinner (Rule 66), Chevron 1300 8499659
*Thinner, Thompson-Hayward Chemical Company
No. 2026 Solvent
An alternate thinner solvent may be blended using the following materials:

*Mineral Spirtis (Rule 66 Tape Thinner), 80% 8499659
Butyl Acetate – Technical Grade, 20%
*Alternate materials for Xylol where compliance with pollution control regulations is required.
Enamel, Red Air-Drying, 1 Litre (1 Qt.) 8061130
19 Litres (5 Gal.) 8048876
Grease, Chevron SRI-2, 2.3 kg (5 lb) 8398924