ELECTRO-MOTIVE

M.I. 3900
*Rev. F

MAINTENANCE INSTRUCTION

GENERAL MAINTENANCE—MODEL D37, D47, D57, D67, D75, D77, AND D87 TRACTION MOTORS

INTRODUCTION

This Maintenance Instruction contains general or "running" maintenance recommended for traction motors. It includes a procedure for removing a traction motor from a locomotive and various inspections which should be made in such instances. Refer to recommended maintenance intervals specified in the applicable Scheduled Maintenance Program.

DESCRIPTION

All of the models are similar in appearance and are the same general size, Fig. 1. The differences are internal improvements to later models which have progressed from the original Model D37 to improve service life and to increase motor output.

The later model motors are similar to the Model D37 with the following differences:

A new axle cap oil overflow arrangement to prevent overfilling.

A manganese-steel wear plate to the motor nose support to obtain longer wear plate service life.

A new high temperature varnish.

Commutator end recabling to reduce temperature of commutator end bearing under high speed, high current, dynamic braking.

D47 Increased copper size in stator field.

D57 Application of a modified silicone varnish to armature coils to improve heat resistance, improved commutator seasoning, and the use of constant pressure brush holders.

D67 New armature coil construction to reduce temperature and moisture.

New type brush holders with longer brushes for extended brush life.

NOTE

The longer brushes cannot be used on Models D37, D47, or D57 unless brush holders are changed or modified.

Nylon grease retaining insert in pinion end bearing cover to prevent grease purging.

D77 A thinner armature insulation (polyimide film) which allows an approximate 20% increase in armature coil copper.

TIG (tungsten inert gas) welded joint between armature coil and commutator to ensure a more positive electrical connection.

Three-wafer resilient pad brushes to provide improved commutation and increase brush life.

Nomex V-rings in the commutator to improve commutator stability and performance.

D87 Developed to support higher horsepower locomotives utilizing a new controlled wheel creep system.

*This bulletin is revised and supersedes previous issues of this number.

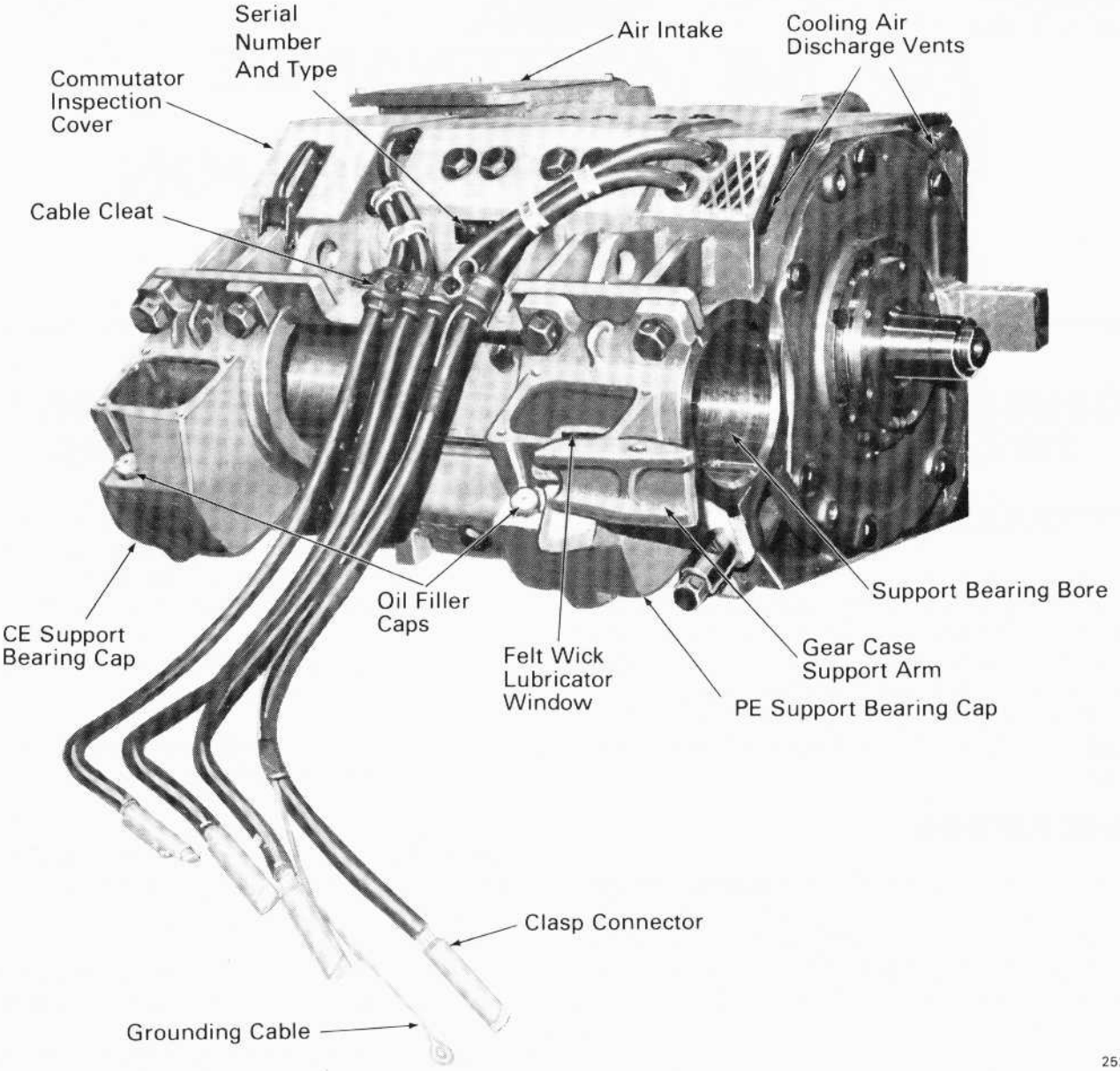

Fig.1 – Traction Motor

Increased copper size in stator main field and interpole coils.

Increased copper size and transposed conductors (at center of armature core) in the armature coils.

Change in stator coil air baffles because of increase in the main field and interpole coil sizes.

Larger size pinion end bearing for additional load capability and a longer service life.

Redesigned bearing associated parts to accommodate larger pinion end bearing.

CLEANING

It is essential that the traction motor be kept as clean as possible, both on the inside and outside. Oil and grease soaked dust and dirt should not be allowed to accumulate as this can prove detrimental to insulation and motor performance in general.

Cleaning the outside of the motors can be done by the common method of using a steam jet at the same time the trucks, underframe and fuel tank are washed. If this method is used, the diesel engine must be running at about 450 RPM to force sufficient traction motor blower air through the motors to prevent water or moisture from entering.

The motor interior can be conveniently cleaned by blowing dust and dirt away with compressed air. A large volume of clean, dry compressed air should be used at a reasonable low presure. Blasts of high pressure air should be avoided due to the possibility of loosening or damaging the protective coating on the insulation.

Clean, dry lintless cloths should be used in conjunction with the air to clean away heavier deposits of dirt, and for wiping the brush holder insulators.

In cases where air and dry wiping cloths prove incapable of removing caked grease and dirt, a stiff brush, soft wood or fibre scrapers may be used. In severe cases it may be necessary to dampen a cloth in solvent such as Stoddards Solvent to loosen and remove imbedded deposits. Every precaution should be taken to keep the solvent off the commutator and copper parts as well as insulated coils and windings.

CAUTION

Adequate ventilation and safety precautions are necessary when handling inflammable fluids such as Stoddards Solvent (flash point 46° C [115° F]).

Clorinated hydrocarbon type cleaning solvents are not recommended for use on the equipment because of their effect on the insulation system. They have a tendency to attack semi-cured silicone rubber and to swell ethylene propylene rubber, natural rubber, neoprene and hypalon during extended soaking periods. The vapor state at 71° C (160° F) attacks uncured silicone rubber within 20 minutes. These solvents and their vapors also have an adverse effect on commutation. Special care is also necessary to avoid subjecting the polyester glass insulated brush holder studs to alkaline type cleaning solutions.

COMMUTATOR BRUSH HOLDERS

All motors since the D57 have been equipped with constant pressure spring type brush holders. The D67, D77, and D87 motors use a brush holder which will accept a longer brush. This longer brush reduces maintenance by extending the period between brush changeouts. The D37 and D47 model traction motor brush holders can be modified to use the constant pressure spring cell, but if the longer brush is desired, the new style brush holder should be purchased. All early model traction motors rebuilt at the factory are equipped with the latest model brush holder.

CONSTANT PRESSURE SPRING TYPE BRUSH HOLDER

Constant pressure spring type brush holder spring pressure is pre-set and cannot be adjusted, however, if there is reason to suspect possible loss of spring pressure such as the possibility that heat caused by a commutator flashover, caused spring pressure loss, the spring pressure should be checked. It is difficult to check brush holder spring pressure accurately with the brush holder in place, and it is recommended that the brush holders be removed.

The spring pressure of a new spring with the spring cell in the brush holder should be within 1.8 to 2.3 kg (4 to 5 lbs) at each of the two springs as measured with a spring tension scale at the position shown in Fig. 2.

The spring pressure of a used spring should be a minimum of 1.6 kg (3.5 lbs) when checked at the position shown in Fig. 2.

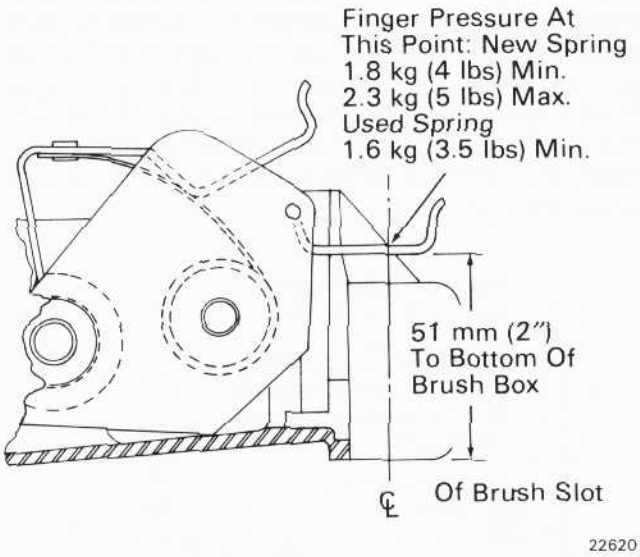

Fig.2 – Measuring Constant Pressure Brush Holder Finger Pressure (Spring Cell In Place)

If the spring pressure of a new or used spring cell with the spring cell in the brush holder is not within tolerance, remove the spring cell from the brush holder and check as shown in Fig. 3. If the spring pressure is not within tolerance, replace the spring cell with a new spring cell.

COIL SPRING (ADJUSTABLE) TYPE BRUSH HOLDER

New or replacement brush holder springs for coil spring (adjustable) type brush holders should be set for an initial pressure of 4 to 5 kg (9 to 11 lbs) as

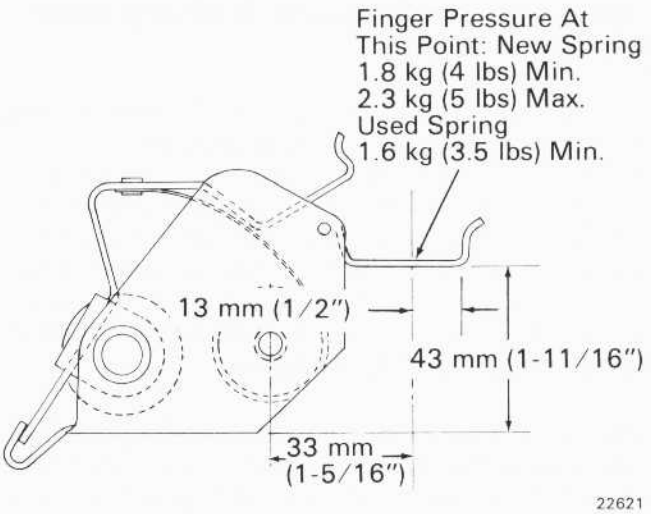

Fig.3 – Measuring Constant Pressure Brush Holder Finger Pressure (Spring Cell Removed)

measured with a spring tension scale with pressure spring lifted 3 mm (1/8") above the top inside edge of the brush box as shown in Fig. 4. It is difficult to check brush holder spring pressure accurately with the brush holder in place and it is recommended that the brush holders be removed. Since new brush holder springs lose pressure due to aging in the first few weeks of operation, reset the spring pressure as necessary. After one adjustment, the springs should retain their pressure.

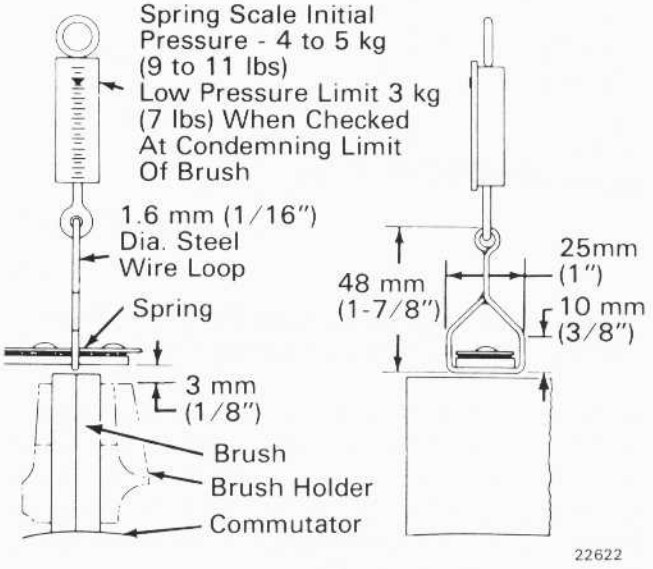

Fig.4 – Measuring Coil Spring Brush Holder Finger Pressure

The minimum allowable pressure on a completely worn brush is 3 kg (7 lbs). Thus spring pressure should always be set high enough (4 to 5 kg [9 to 11 lbs]) to compensate for loss of pressure that results as the brush wears.

Spring tension can be regulated by removing the cotter pin locking the thimble to spindle and turning the thimble and the spindle. The adjusting collar on the thimble can be set every half notch using alternately two cotter pin holes in the spindle. This will allow a variation of tension from 0.57 to 0.68 kg (1-1/4 to 1-1/2 lbs) for each half notch.

The complete brush holder assembly should be checked to ensure the mounting is secure and the cable and shunt connections are tight. The brush holder should be checked and adjusted if necessary to maintain a dimension of 3 mm to 5 mm (1/8" to 3/16") between the bottom of the carbonway and the commutator surface.

To ensure proper tightness of brush holders and connections, the following dry torque values should be applied;

7/8"-9 brush holder block bolt - 203 to 217 N·m (150 to 160 ft-lbs).

1/2"-13 brush holder cable to brush holder bolt – 95 to 102 N·m (70 to 75 ft-lbs).

5/16"-18 brush holder shunt screw - 15 to 20 N·m (10 to 15 ft-lbs).

BRUSH HOLDER INSULATOR STUDS

Brush holder insulator studs, Fig. 5, should be kept clean and free of defects. The polyester type brush holder studs are unusually resistant to flashover damage. If flashover damage does occur these insulators usually can be restored to satisfactory condition by simply polishing them with fine sandpaper. Polyester glass material should never be subjected to alkaline cleaning solutions.

NOTE

Early model brush holder insulator studs were insulated with porcelain and should be replaced with the polyester insulated studs. Polyester is more durable and does not become permanently carbon tracked.

Older model brush holder insulator studs have a silicone rubber insulated sleeve over the base of the studs, Fig. 6. When replacing or reconditioning brush holder assemblies, ensure insulated sleeves are in place.

The current model brush holders have a silicone rubber boot which fits over the base of the stud and brush holder, Fig. 6.

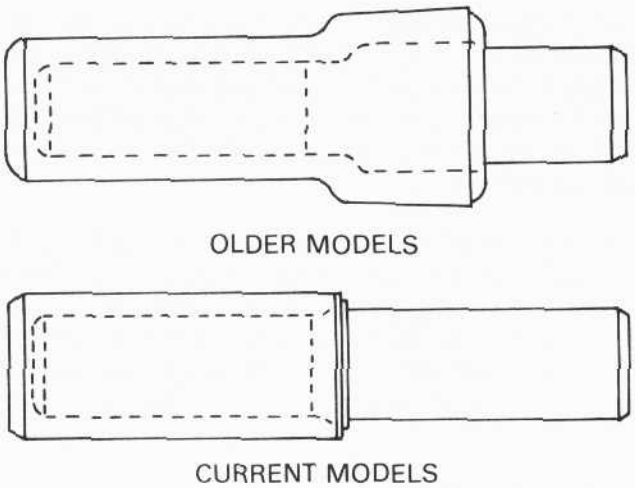

Fig.5 – Polyester Brush Holder Insulator Stud

Replacement polyester glass insulated studs are available in the following sizes:

Standard size - 8159003

To be used in new brush holders or when stud holes are within 25.235 mm ± 0.013 mm (.9935″ ± .0005″).

0.05 mm (.002″) Oversize - 8209068

0.20 mm (.008″) Oversize - 8219773

For stud holes which have had a standard size pressed out.

The following studs can be used for extensively scored stud holes which have been reamed out.

0.79 mm (.031″) Oversize - 8209069

0.84 mm (.033″) Oversize - 8222653

1.57 mm (.062″) Oversize - 8222652

1.65 mm (.065″) Oversize - 8222654

The oversize studs may be identified by the number 2, 8, 31, 33, 62, or 65 stamped on the bottom of the stud. The number is in reference to the amount oversize in thousandths of an inch. For example, the number 2 identifies the 0.05 mm (.002″) oversize stud. The number 65 identifies the 1.65 mm (.065″) oversize stud.

INSULATOR STUD INSTALLATION

A sleeve-type tool made of half-hard brass, Fig. 7, should be used for pressing the studs into the brush holder.

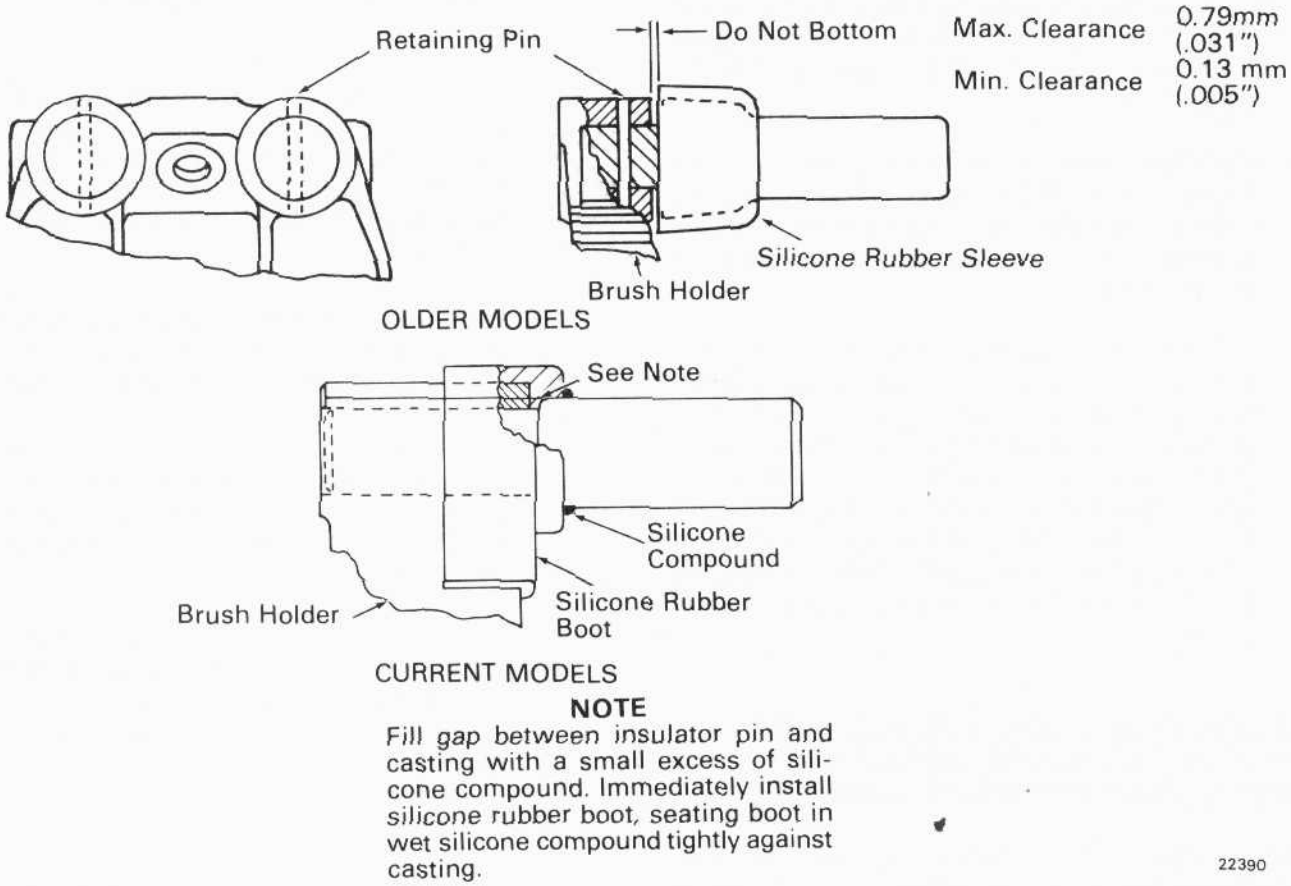

Fig.6 – Brush Holder Insulator Stud Installation

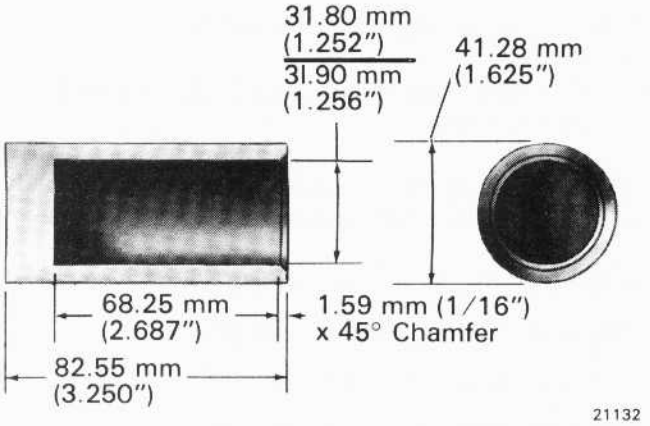

Fig.7 - Insulator Stud Installation Tool

To replace the brush holder insulator studs, perform the following procedure:

1. Press out brush holder insulator stud, shearing retaining pins.

2. Clean up stud holes of brush holder, if required.

3. Select proper oversize stud. Ensure that 0.05 mm ± 0.025 mm (.002" ± .001") press fit is obtained. Press in stud using sleeve-type tool. Clearance between the stud shoulder and brush holder must be maintained to ensure the insulation does not get damaged against the brush holder.

4. On older model brush holders, drill and pin brush holder and stud. Use a No. 23 drill, (.154"), and refer to Service Data for pin part number. Peen over hole on both ends after installing pin.

   On current model brush holders, fill the gap between the insulator pin insulation and the casting with a small excess of silicone compound. Immediately install silicone rubber boot, seating boot in wet silicone compound tightly against the casting. Apply a smooth continuous 5 mm (3/16") fillet of silicone compound between the insulator pin and the boot. Refer to Service Data for silicone compound part number.

CONVERTING COIL SPRING TYPE BRUSH HOLDER TO CONSTANT PRESSURE TYPE BRUSH HOLDER

The old style D37 and D47 coil spring type brush holders can be converted to a constant pressure type brush holder.

To prepare brush holder for conversion first dismantle it by removing the spindle, thimbles, and springs and thoroughly clean and inspect the brush holder casting and insulator pins. Any defects that are found should be repaired. The conversion procedure is as follows:

1. Remove all raised numbers, letters, trade marks or bosses from the spring cell pockets which will not allow the spring cell to seat firmly. Do not remove the oblong boss from the rear of brush holder casting 8310010 but be sure this surface is reasonably parallel with the casting surface.

NOTE

Spindle 8081883 may be used if in good condition, but it is recommended that the new type spindle 8296216 is used.

2. Insert the spindle in the spindle hole and push spindle up against top of the hole. Check the distance from the bottom of the spindle to the inside surface of the bottom web of the brush holder casting. If this dimension is 0.51 mm (.020") greater than dimension shown in Fig. 8, perform the following:

   a. Inspect spindle to spindle hole clearance. Maximum clearance of 0.51 mm (.020") is acceptable.

      If clearance is greater than 0.51 mm (.020"), inspect thimble. If spindle has cracks or has wear in excess of 0.25 mm (.010"), replace spindle with a new part. New spindle measures 9.462 mm - 9.525 mm (.3725" - .3750").

   b. If spindle is acceptable, repair spindle hole. Ream or drill worn spindle holes to 12.77 mm to 12.88 mm (.503" to .507") diameter.

      Clean and flux the drilled holes and plugs to be used. Use a low temp brazing flux for general use with silver brazing alloy such as Handyflux. Refer to Service Data for plug part number.

      Insert plug in drilled hole and silver braze in place. Use a low temp, general purpose, 50% silver, brazing alloy. Use care not to overheat and warp brush holder during brazing.

      Clean in hot water.

      Redrill holes to 9.35 mm (.365") maintaining the 61.9 (2-7/16") dimensions.

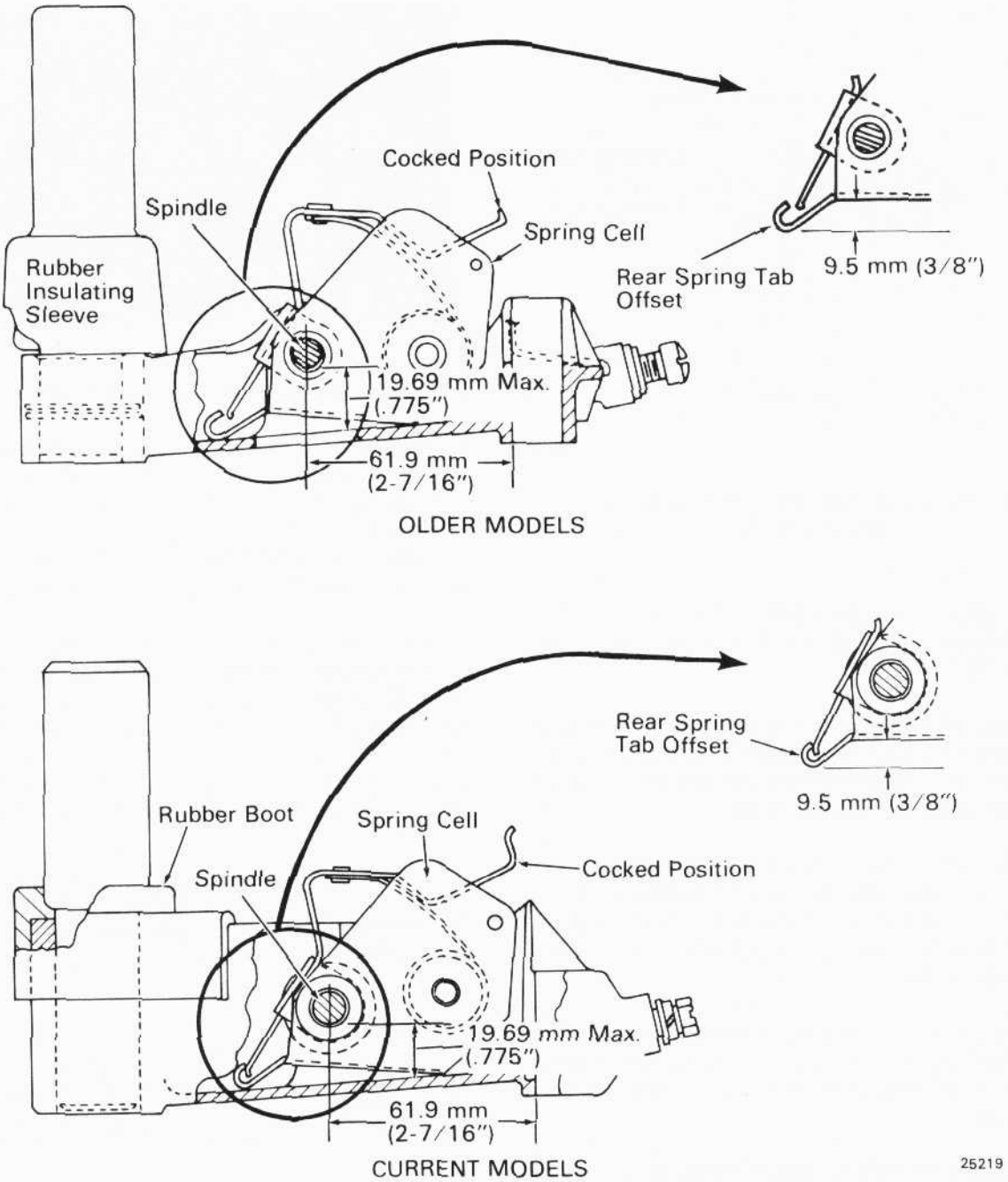

Fig.8 – Constant Pressure Brush Holder

Ream the 9.35 mm (.368") drilled holes to 9.57 mm – 9.65 mm (.377" – .380").

3. The rear tab of each new spring cell which is furnished with the conversion kit, is correctly adjusted for a 9.5 mm + 0.8, - 0 (3/8" + 1/32"-0) offset as shown in Fig. 8. If spring cell is being reapplied, make certain that this dimension is correct before applying the cell to the brush holder.

4. Place spring cell fingers in "cocked" position as shown in Fig. 8 when assembling cell to holder.

5. Center a spring cell in right hand pocket and align with finger slot "A" as shown in Fig. 9.

6. Insert aligning tool through spindle hole and spring cell being sure to add necessary washers at areas "B" and "C" as shown in Fig. 9. Check alignment of spring cell with finger slot "A" and if cell is out of line remove aligning tool and reassemble.

7. Use the same procedure with the center and left hand cells being sure to use as many washers in

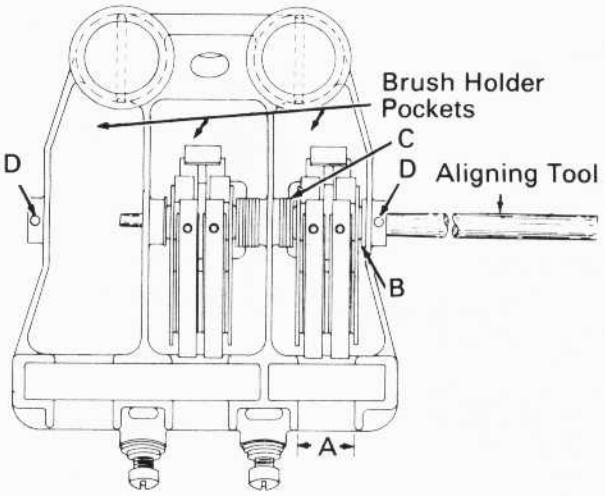

Fig.9 - Installing Constant Pressure Cell In Brush Holder

the lineup as possible. After each cell is assembled re-check its alignment with finger slot "A."

8. When all cells have been installed, drive the aligning tool out of assembly with the spindle. Continue to drive the spindle through until it is centered in the brush holder.

9. Drill two 3 mm (1/8") diameter holes at "D" Fig. 9. Insert groove pins furnished with the conversion kit and peen holes to hold pins. Check to see that the spring cell is tight in the brush holder.

10. After assembly, release spring cell fingers from cocked position to prevent handling damage and to prepare assembly for installation into motor.

COMMUTATOR BRUSHES

The D75, D77, and D87 motors are equipped with a three-wafer resilient pad brush which, as stated previously, improves commutation and increases brush life.

Three split type brushes are used in each of the four brush holder assemblies. The brushes should move freely in the brush holder and not be stuck with dirt. This can be checked by lifting the brush pressure spring and raising and lowering the brushes by hand. The new constant pressure brush holder springs must be raised by hand and placed in a "cocked" position, Fig. 8, but the older coil spring brush holder springs may be lifted with the use of a lifter as shown in Fig. 10.

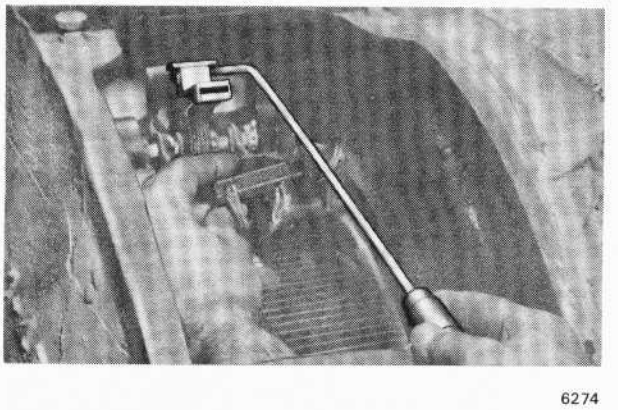

Fig.10 - Brush Inspection

Carbonways must be smooth and brushes must fit closely so they will not chatter. Brush holders with carbonways worn enough to permit brush chatter should be replaced. Carefully lower the brush pressure spring over the brush to avoid snapping which is likely to cause the brush to be chipped.

Brushes should be carefully inspected and replaced if found chipped, broken, or worn to the condemning limit. This brush wear limit is easily determined by measuring the height of the brush pressure spring above the brush holder. If the spring is found to be 3 mm (1/8") from contacting the brush holder as shown in Fig. 11, the brush should be replaced.

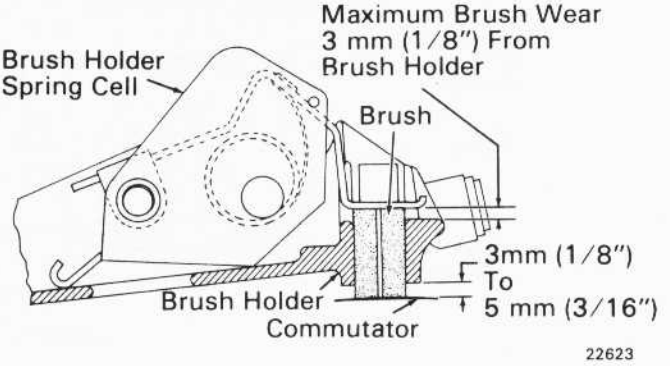

Fig.11 - Measuring Brush Wear

Brushes may be replaced individually as they wear to their limits, rather than replacing all of them on a motor at one time. Replacement brushes should, however, be of the same type and grade as the ones replaced, since mixing brushes in the same motor can prove to be detrimental to successful operation.

NOTE

Model D67, D77, and D87 motors are equipped with three-wafer padded brushes part number 9322057 or 9322058 which are manufactured with a contour at the commutator end of the brush. These brushes do not require sanding.

If old brushes are used, they should be installed in the same position in the brush holder from which they were removed. When new brushes are installed on models other than D67, D77, and D87, the brushes must be "sanded in " by wrapping 1-1/2 turns of medium gauge sandpaper (with abrasive side out) around the commutator before the brushes are applied. Install the new brushes and rotate the armature until all the brushes are seated. Refer to Service Data for brush type and part numbers.

If new brushes are sanded in, remove sandpaper and blow out carbon dust with clean, dry compressed air at reduced pressure. Use a clean, dry, bound-edge cloth to remove carbon from string band and commutator riser while manually rotating the armature. Wipe carbon dust from brush holder insulators.

Brush shunts should not be twisted or braided. The shunt connection to the brush holder should be securely made. Brushes should be replaced if found to have broken shunts, or where tamped shunt connection to the brush is loose.

COMMUTATOR

The commutator is a vital area on the traction motor and it should be kept in the best condition possible. Inspections should be made at frequent intervals to ensure detection of surface faults before loss of service or expensive repairs become necessary. Such conditions as film stripping, bar burning, high or low bars, high mica or flat spots tend to become more serious with time. When found, the cause should be determined and corrected as soon as possible.

CREEPAGE SURFACES

The creepage area on units equipped with a teflon sleeve over the string band and TIG welded commutator terminations, Fig. 12, should be thoroughly cleaned with alcohol to remove all traces of carbon.

The creepage areas on units which have the string band area coated with epoxy or red enamel and soldered commutator terminations, Fig. 12, should be cleaned and recoated with red air drying insulating enamel whenever necessary. The procedure for repainting this surface is as follows:

1. Clean surfaces thoroughly with alcohol. Remove any trace of carbon.

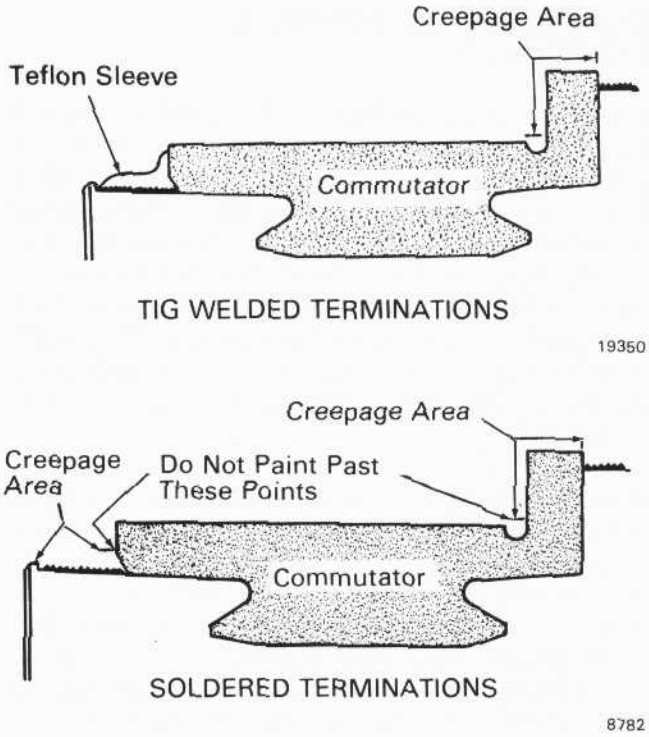

Fig. 12 - Care Of Commutator Creepage Area

NOTE

Red enamel can be applied over polyester surfaces if the surface has been damaged.

2. Using a clean brush, apply the red insulating enamel carefully to the creepage surfaces. Make as thin a coat as possible applying the enamel evenly leaving no dabs or overlapping areas.

   The enamel will generally be of the proper consistency if the cover on the container has been kept tight. If thinning is necessary, use mineral sprits sparingly.

3. Take care to avoid getting enamel into commutator slots or the relief at the bottom of the commutator neck.

4. Wait until enamel is dry before running motor.

NOTE

Do not apply enamel over carbonized or charred insulation. If the insulation cannot be cleaned up satisfactorily as outlined above, the motor should be removed for more permanent repairs.

COMMUTATOR SURFACE CONDITIONS

Frayed brush shunts, highly polished brush to brush box contact surfaces, excessively worn brush pressure arms, broken pressure springs, and rapid brush wear are indications of more than normal brush movement within the brush box and the cause should be determined. With few exceptions, the cause will be found to be commutator surface irregularities. The constant monitoring of the brush problems mentioned above is the best and easiest method of determining when a commutator should be ground.

Road seasoning (repeated heating and cooling of the commutator), standstill burns, and overspeed can cause some slight bar movement to occur. This bar movement, depending on the amount, the number, and location with respect to each other, could trigger conditions detrimental to both the commutator and brushes. A commutator having certain irregularities in profile could operate satisfactorily at lower locomotive speeds, however, when operated at higher locomotive speeds, the problems of flashover, brush breakage, and frayed brush shunts may develop. A very rough commutator would have these same conditions occurring at lower locomotive speeds.

A rough commutator may or may not be readily apparent to the eye. Any question as to the condition of the surface can be answered with the use of a dial indicator attached to the motor so the plunger rides on the commutator surface. Be sure indicator is on one of the brush tracks. Rotate the armature slowly and carefully observe the readings. By merely noting the minimum and maximum readings, a true picture of the commutator surface will not be obtained. The 0.08 mm (.003″) runout tolerance (for new or rebuild motors) is not applicable as a measurement of commutator irregularity as the problem of irregularity is not one of machining tolerances but of bar to bar movement. An example of this would be to have readings around the commutator that give a total variation of 0.05 mm (.002″), however, hidden within the 0.05 mm (.002″) variation are six low areas, each spanning one or more bars. This commutator would cause the brushes to bounce with resultant damage. A commutator having a total variation of 0.10 mm (.004″) the minimum and maximum readings 180° apart is an acceptable commutator whereas the first example, 0.05 mm (.002″) variation with several low areas, is not acceptable even though the total variation is much less. It is difficult to give a number value which would determine when a commutator should be ground. The values obtained by dial indicator must be evaluated with respect to the performance of the motor (brush problems, flashovers, etc.) and a certain amount of personal judgement must be used. A useful rule of thumb is that any condition worse than 0.05 mm (.002″) in a six (6) bar span calls for grinding the commutator.

Resurfacing the commutator by turning in a lathe, or use of a grinder and grinder adapter, is the only correction recommended for a rough commutator. Hand stoning is definitely not recommended.

COMMUTATOR GRINDER MAINTENANCE

In order to produce an acceptable commutator surface finish, it is imperative that the jig stoning fixture be maintained in good condition. The use of a poorly maintained or incorrectly adjusted grinder will result in perpetuating the surface irregularities. Refer to Fig. 13 and check the grinder as follows:

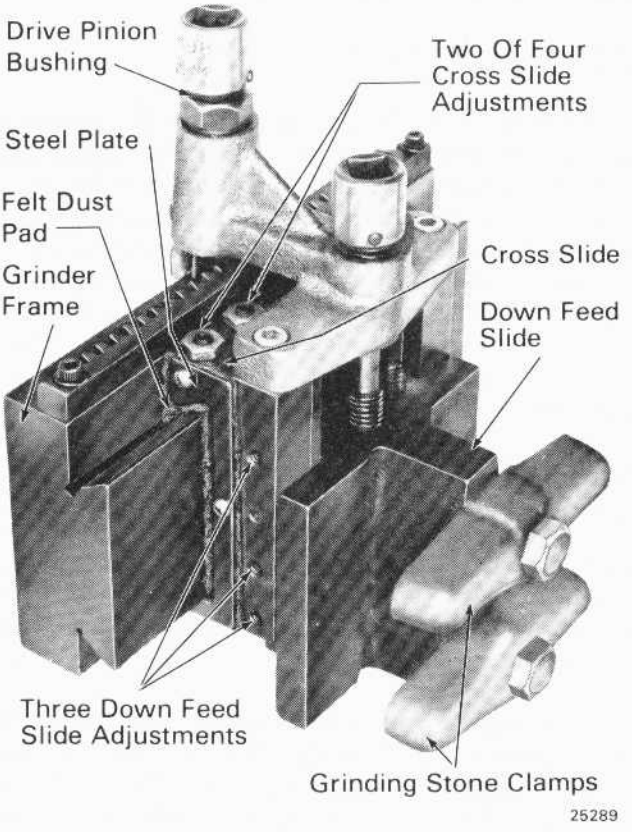

Fig.13 - Commutator Grinder Adjustments

There can be no abnormal movement, however slight, between the grinder cross-slide and the grinder frame or between the down-feed slide and the cross-slide. The movement can be detected by

placing a fingertip on the parting of the two pieces and attempting to move either one of the pieces in all directions other than the normal direction of travel.

The travel of the cross-slide should be smooth with no binding, jerking, or tightness during the full travel from end to end. Any binding or tightness in the cross-slide travel is usually the result of one or more of the four Allen screws being incorrectly adjusted. Jerky movement of the cross-slide travel is usually the result of either grinding dust trapped between the two sliding surfaces or an incorrectly adjusted or loose bushing on the pinion shaft.

The grinder must be periodically cleaned and adjusted. The frequency of the cleaning is determined by the use of the grinder and should be performed before there is any binding or jerky movement of the cross-slide.

Do not attempt to clean an assembled grinder by dipping in a solvent or by using air pressure to blow out dust. The grinder must be completely disassembled to clean.

COMMUTATOR GRINDING

Commutator surface irregularities such as etching, roughness, or slight burning can often be corrected by resurfacing, using a grinding fixture and an adapter.

NOTE

In order to produce an acceptable commutator surface finish, it is imperative that the jig stone fixture be maintained in good condition. The in-feed and cross-feed gib ways must be clean and free from burrs so the device feeds smoothly. The gib keys must be adjusted so that no free play exists in the sliding assemblies, but not so tight to cause binding. Refer to Commutator Grinder Maintenance Section prior to grinding the commutator.

This grinding can be done on a motor in a truck while under the locomotive by using the following method:

1. Block all wheels on truck at opposite end of locomotive to one having traction motor commutator ground.

2. If the axle of the wheel set driven by the motor having its commutator ground is equipped with roller journal boxes, proceed as follows to raise the desired wheel set:

   a. Apply suitable wooden or steel blocks under the two journal boxes between the pedestal tie bar and the journal box on the wheel set to be raised. These blocks will hold the axle in its original position and eliminate unnecessary raising when the motor is being run. Next apply jacks under the locomotive frame at jacking pads provided and raise one end of the locomotive with truck so the desired wheels are just above the rails.

   b. An alternate method of raising a pair of wheels is to remove the weight of the locomotive from the truck with jacks, then raise the desired wheel set by placing jacks directly under the journal boxes.

3. If the axle of the wheel set driven by the motor having its commutator ground is equipped with friction type journal boxes, apply suitable wooden or steel blocks under the two journal boxes between the pedestal tie bar and journal box on the wheel set to be raised. Then apply jacks under the locomotive frame at jacking pads provided and raise one end of the locomotive with truck so that the desired wheels are just above the rails. Next jack CAREFULLY under traction motor axle bearings until they take the weight of the axle and wheels only. Block all raised parts with exception of wheel set being worked on.

GRINDER ADAPTER

There are two grinding adapters available for use, either of which will provide a satisfactory mounting for the grinder. Adapter 8354239, Fig. 14a, requires the removal of the top brush holder from the motor and the adapter installed in the brush holder mounting blocks. Adapter 8354226, Fig. 14b, is mounted on the motor frame over the large bottom inspection opening and does not require removal of the brush holder.

ADAPTER 8354239 INSTALLATION

1. Remove the bolt securing the brush holder cable to the top brush holder. Remove the bolt securing the top brush holder clamp block and remove brush holder.

2. Tape the copper lug of the lead which was disconnected from the brush holder so it will not short against motor frame.

3. Install the adapter and secure it with the brush holder clamp and bolt.

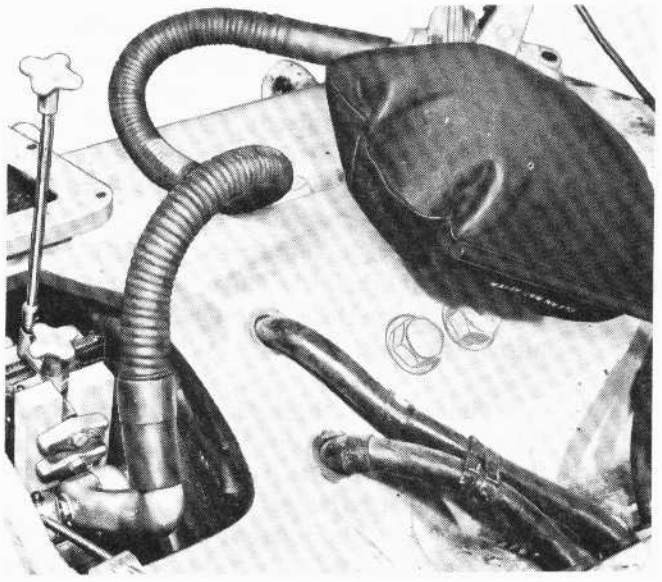

8546

(a) Brush Holder Mounted

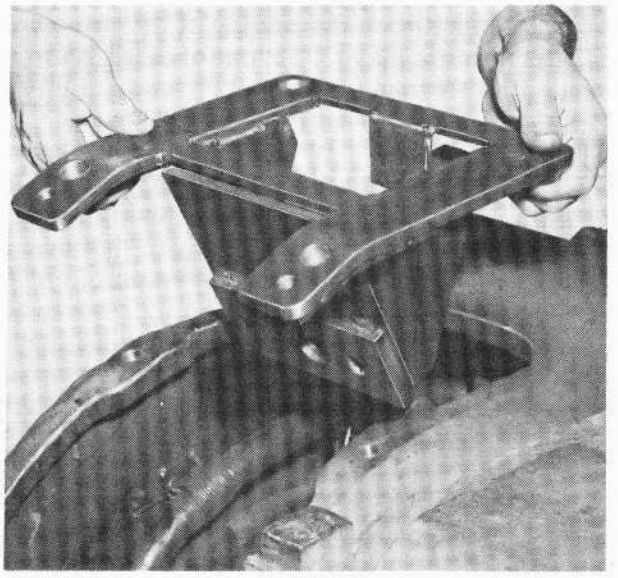

13954

(b) Frame Mounted

Fig.14 – Commutator Grinder Application

ADAPTER 8354226 INSTALLATION

1. Place motor on a stand at least 75 cm (2-1/2 ft) above the floor level.

NOTE

The adapter has four bolt clearance holes (unthreaded holes) and two threaded 1/2″-13 holes. The two threaded holes should have a bolt installed that has at least 64 mm (2-1/2″) of thread. The function of these two bolts is to provide a variable adjustment that will compensate for the different frame design (fabricated or cast) and also the frame contour irregularities. The adapter is mounted to the frame with two 1/2″-13 bolts at the bottom and two 1/2″-13 bolts located at the center of the inspection opening. The end of the adapter having one bolt clearance hole on each side should be towards the bottom of the motor frame.

2. Mount the adapter on the motor frame with four 1/2″-13 bolts, but only tighten the two bottom bolts. Tighten the bolts in the threaded holes until the bolt ends contact the motor frame. Do not continue to tighten the bolts as this will tend to distort the adapter frame. When both bolt ends contact the frame, the two bolts through the clearance holes should be tightened to secure the adapter to the motor frame.

GRINDER INSTALLATION

1. Install alignment bar on the grinder down feed slide. Check the alignment bar contact to the feed slide for zero clearance with a thickness gauge. Refer to Fig. 15. Any clearance at either side of the alignment bar contact surface indicates the bar is not parallel to the grinder.

2. Install the grinder with the alignment bar on the adapter. When frame mounted adapter is used, the brush shunts in the bottom brush holder should be checked for maximum clearance to the grinder.

3. Position the motor armature so that the alignment bar will contact approximate center of the commutator bar. Parallel the alignment bar to the commutator surface using the small areas outside of the brush track at both ends of the commutator bar. The alignment bar should be within 0.08 mm (.003″) of paralleling the commutator bar.

4. Remove the alignment bar from the grinder and install two grinding stones. Use finish grade stones. Mount the stones to that they are seated squarely on the commutator. Pull stones away from the commutator using the grinder cross-travel feed.

GRINDING

The supply voltage to the traction motor can be a DC welding machine (or other source of DC electrical energy). The desired motor RPM for the grinding operation is approximately 1500 RPM. A satisfactory surface finish can be obtained at a

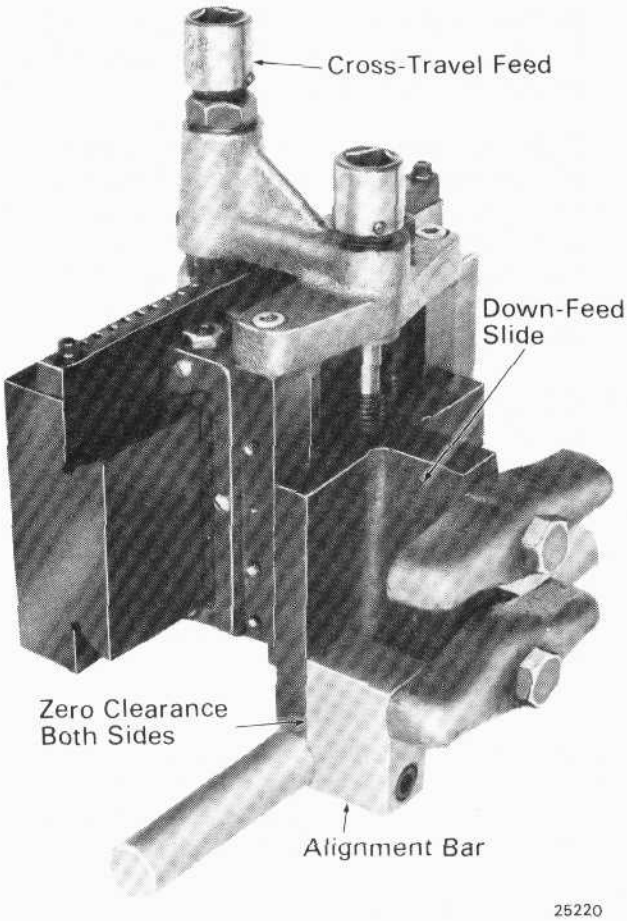

Fig.15 - Commutator Grinder Alignment Bar Installation

reduced RPM, but the grinding time will be lengthened. Do not use a speed below 1000 RPM.

NOTE

Commutators can be ground by utilizing locomotive power. Contact EMD Service Department for details.

1. Disconnect all four traction motor leads of the motor to be worked on, and tag the leads so they can be reconnected in their original position. Connect the motor leads to rotate the armature in a clockwise direction as viewed from the commutator end. Incorrect rotation (counterclockwise) could cause the grinding stones to chatter on the commutator. Connect the traction motor leads as follows:

   Connect the positive supply lead to the "AA" lead of the motor.

   Connect the "A" and the "F" leads of the motor together.

   Connect the negative supply lead to the "FF" lead of the motor.

NOTE

Brushes that are used in the motor for grinding operation will have particles of grinding stone, dust, and copper imbedded in the surface that rides on the commutator. These particles can cause rapid deterioriation of the commutator surface if the contaminated brushes are not removed from the motor. It is recommended that if the brushes in a motor are of sufficient length to continue service after the commutator is ground, they should be removed from the motor before grinding is begun and then reinstalled after completion of the operation. Ensure brushes are marked so that they can be reinstalled in their original position. Brushes that are near the condemning limit for length should be used in the motor for the grinding operation.

2. Start the motor and feed the grinding stones into the commutator slowly, using the down-feed handle until light contact is made. Proceed to grind the commutator by feeding the stones not more than 1/8 turn of the down-feed handle (45°) and move the stones across the commutator at a moderate speed for three complete passes. One pass being the movement across the commutator in either direction. Upon completion of the third pass, the stones can be fed down another 1/8 turn of the down-feed handle. Alternating the end of the commutator from which the stones are fed down will minimize the possibility of the development of a taper across the commutator. Continue this procedure until all low areas have been completely eliminated.

NOTE

Feeding the grinding stones down more than 1/8 turn of the down-feed handle will result in very rapid wear of the grinding stones and also cause copper rollover on the trailing edge of the commutator bar. The copper rollover will have to be removed with the use of a de-burring tool. The recommended light feed will result in very small copper slivers on the trailing edge of the commutator bar which can easily be removed with a wire brush.

3. Remove the stones from the grinder and place them in their original box so that they will not become contaminated with oil or dirt. Remove the grinder and adaptor.

4. With the armature rotating, clean the outer end of the commutator bars with a small piece of grinding stone.

5. Remove and discard the brushes used in grinding operation.

6. Thoroughly clean the motor to remove all copper and grinding dust by directing clean, dry compressed air at moderate pressure on the face of the commutator. Blow out brush holders, stator windings, and end housing. Rotate the armature by hand when blowing out commutator slots.

7. Remove the slivers of copper on the trailing edge of the commutator bar with a clean wire brush. Position the brush close to the commutator riser with the wire bristles toward the riser face and roll the wire bristles down toward the commutator slot until they enter the slot. Move the brush across the commutator until the wire bristles have cleared the end of the commutator slots. While moving the brush across the commutator, apply moderate pressure in towards the commutator as well as pressure towards the trailing edge of the commutator bar. This procedure will remove all copper slivers on the bar and in the slots without damaging the commutator surface.

NOTE

The scratch marks will disappear when the soft grade of chalk stone is used to finish the seating of the brushes.

8. When the depth of the mica undercut between copper bars is less than 1.2 mm (3/64″), use commutator slot file, Fig. 16, to undercut the mica to proper depth. Do not exceed the undercut maximum depth of 2 mm (5/64″).

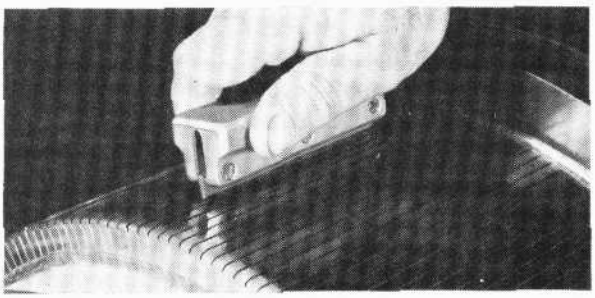

8536

Fig.16 – Cleaning Commutator Slots

9. Use chalk stone for final clean up of commutator. Do not use emery cloth or sandpaper for this purpose. Lubricant should never be used on commutators, as brushes have enough graphite to supply their own lubrication.

10. Rotate armature by hand and blow clean dry air into the commutator slots to remove any loose pieces of copper. Wipe dirt and copper dust away with clean cloths. Carefully inspect cleaning job and particularly the slots between commutator bars to see that all traces of undesired copper have been removed.

11. Replace brush holder assemblies and brushes. Install either new or the used brushes, but do not use any brush that had been left in the brush holder during the grinding operation. Reconnect cables.

12. Reconnect cables and install inspection cover. Check motor for proper rotation before returning locomotive to service.

NOTE

If the commutator has been damaged to such an extent that the grinding process proves ineffective, the motor will have to be removed and the commutator turned in a lathe.

ARMATURE BEARINGS

NOISE TEST

Each time a traction motor is removed from a locomotive truck it should be operated so that a noise check can be made for faulty armature bearings. Performing this test will serve as a means of detecting faulty bearings thus preventing such a motor from operating in service where it would likely result in a road failure.

The power source and cable connections for this test are the same as described previously for rotating the armature during commutator grinding. The armature speed should be brought up to about 1500 RPM and then the power shut off to allow the armature to coast to a standstill. Carefully listen and try to determine the source of any noise that might be considered unusual. Experience and comparison with other motors will help distinguish a faulty bearing from a normal one.

SEALED GREASE LUBRICATED BEARINGS

Unless otherwise specified by the customer, all traction motors are manufactured with sealed grease lubricated armature bearings. A specific type of grease is used. The amount and method by which it

is applied is carefully controlled. Effective with D67 traction motor, and available for older models, is a sectionalized nylon insert installed in the pinion end bearing cover to prevent an excessive amount of grease from being moved into the rollers by slumping action caused by vibration. This reduces "churning" of the grease which in time causes the grease fibers to become soft and susceptible to purging. These factors should permit the motor to be operated without further bearing attention to the motor overhaul period specified in the applicable Scheduled Maintenance Program. For information on repacking these bearings refer to Maintenance Instruction 6850.

GEAR CASE AND GEARS

The gear case houses the traction motor pinion and mating axle gear, protecting them from dirt or damage and also carries the gear lubricant. The cases are made of two close fitting halves and offset seals to provide complete contact and closure. Removable gutters over the upper cover axle bores divert the flow of grease away from seal surfaces.

The inspection opening and grease filler cap is located at the axle end of the upper and lower halves of the case. This makes it more convenient for inspecting gears, checking and adding lubricant.

The caps are sealed by mating machined surfaces without the need of gaskets. A leaf spring assembled to the top of the filler cap maintains pressure against the flanges around the gear case filler opening, assuring a positive sealing action. The filler caps may be easily removed or applied by depressing the leaf spring, using tool as shown in Fig. 17.

The current gear case also features unit type felt seals inserted into the channels at the axle and pinion openings. The seals are held in place by small pieces of metal at one of the channels next to the inside of the case and are designed to prevent the seal from turning. This will tend to prevent the excessive loss of lubricant that occurred when the previous type felt seals would move in the channels due to the turning forces imposed on them.

LUBRICATION

Inspection of gear cases should include checking for lubricant leaks. Excess lubricant will be discharged through the drain slot of the traction motor grease seal during the first few thousand miles of operation and is no cause for concern. Prolonged leakage at any other point, however, should be corrected.

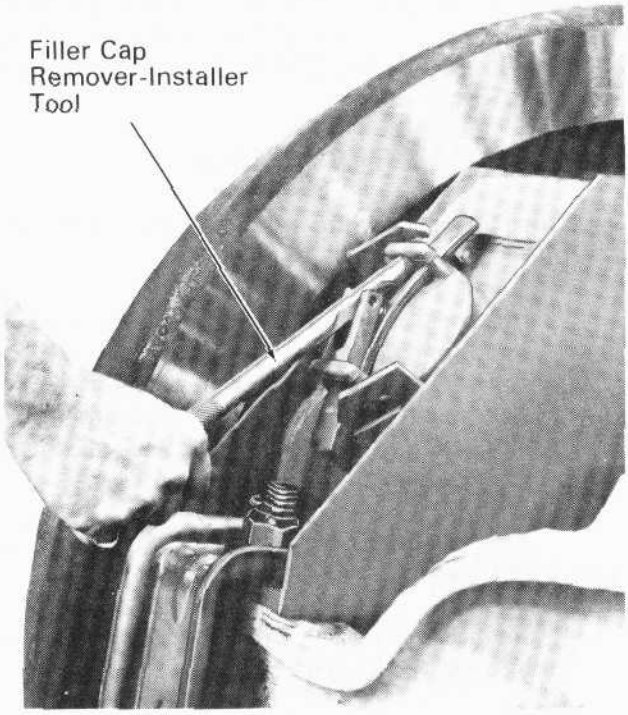

22782

Fig.17 - Filler Cap Removal Tool

Refer to the applicable Scheduled Maintenance Program for the recommended interval of gear case inspection and the type of lubricant to be used. Frequent gear case grease level inspections should be made using such intervals as a guide until the maximum mileage between lubrication intervals can be determined for the specific type of service encountered.

The need for lubricant can be readily determined by observing the condition of the gear teeth through the gear case inspection opening. Gear teeth appearing dry or having bright spots indicate that grease should be added. Gear lubricant should be maintained at sufficient depth to allow the full tooth to dip into grease. Two pounds of recommended lubricant should be added when such inspections indicate the need.

Measurements of lubricant level should be made after a locomotive comes in from a run and is allowed to stand without moving for at least one-half hour. This will allow time for the grease to drain to the bottom of the case and cool.

GEAR CASE INSPECTION WHEN REMOVED

When a gear case is removed from a traction motor/wheel axle assembly, the case should be cleaned and qualified prior to reassembly to assure

that only those gear cases which are capable of satisfactory performance will be reused. Refer to Maintenance Instruction 1520 for gear case inspection and repair procedure.

GEAR CASE REASSEMBLY

1. Prior to reasembling the gear case, check the following:

   Ensure the drain slot between the seals is open to ensure against contamination of support bearing oil with gear lubricant. Grease entering the support bearing would clog and glaze the lubricator wick making it inoperative.

   Ensure gutters are installed on upper half of gear case.

   Ensure lubricating oil has been generously applied to the felt seals.

2. Assemble gear case to the traction motor/wheel axle assembly. Tighten the mounting bolts and torque to 1220 N·m (900 ft-lbs). Apply lockwire. Failure to properly tighten the bolts can result in excess wear caused by vibration on the support bearing cap and pinion end bearing cover supporting arms.

3. Charge gear case with recommended lubricant as specified in Service Data. It is important that the recommended lubricant (see Maintenance Instruction 1756) be used, since substitutes may have poor oxidation stability and tend to solidify in extended service.

4. After an initial trip, check gear case condition and lubricant level. Check level through lower fill opening to ensure a full tooth dip into lubricant. Add lubricant as required. Thereafter, inspections should be made at intervals specified in the applicable Scheduled Maintenance Program.

MOTOR SUPPORT BEARINGS

The traction motor has three suspension points in the truck. Two are provided by the support bearings which connect one side of the traction motor to the wheel axle. The third point is provided by two lugs on the motor frame that contact the top and bottom of the nose support assembly on the truck frame. This nose suspension thus arrests the upward or downward movement of the motor depending on direction of rotation when power is supplied.

The support bearings are of the split type and "hour glass" design. A half of each bearing assembly is inserted in the motor frame while the mating half is installed in the support bearing cap. Both halves are machined together and are identified by a serial number. The bearings are thus matched and must be kept together and installed in sets. The commutator end and pinion end bearing assemblies are interchangeable.

SUPPORT BEARING LUBRICATION

Lubrication of traction motor support bearings is provided by a felt wick inserted in the oil reservoir in each bearing cap. A spring loading arrangement keeps the wicks firmly in contact with the wheel axle through an opening in the bearing.

The oil level in the support bearing cap should be checked at intervals specified in the applicable Scheduled Maintenance Program. The level is determined by inserting a clean steel rule or rod properly marked, into the oil filler hole. Accurate measurements can be obtained only if the rule or rod is inserted parallel to the pipe as shown in Fig. 18.

A narrow window traction motor support bearing cap and support bearing arrangement has been in use since the late D47 traction motor. The narrow window provides increased oil capacity and larger bearing surface as well as an improved wick lubricator, Fig. 18.

The lubricating oil level should be maintained between the limits of 127 mm (5″) maximum and 63.5 mm (2-1/2″) minimum for the wide window bearing used on early D47 and previous model motors. The maximum level for the narrow window bearing is 165 mm (6-1/2″) and the minimum level is 63.5 mm (2-1/2″).

Refer to Maintenance Instruction 1756 for recommendations on the type of lubricating oil specified for support bearings, adding as needed to maintain desired level.

If inspection shows that water is present in the oil reservoir, it should be drained before the unit is returned to service. The wick should also be removed and inspected. Refer to Step 9 of Felt Wick Lubricators paragraphs. Replace unsatisfactory wicks.

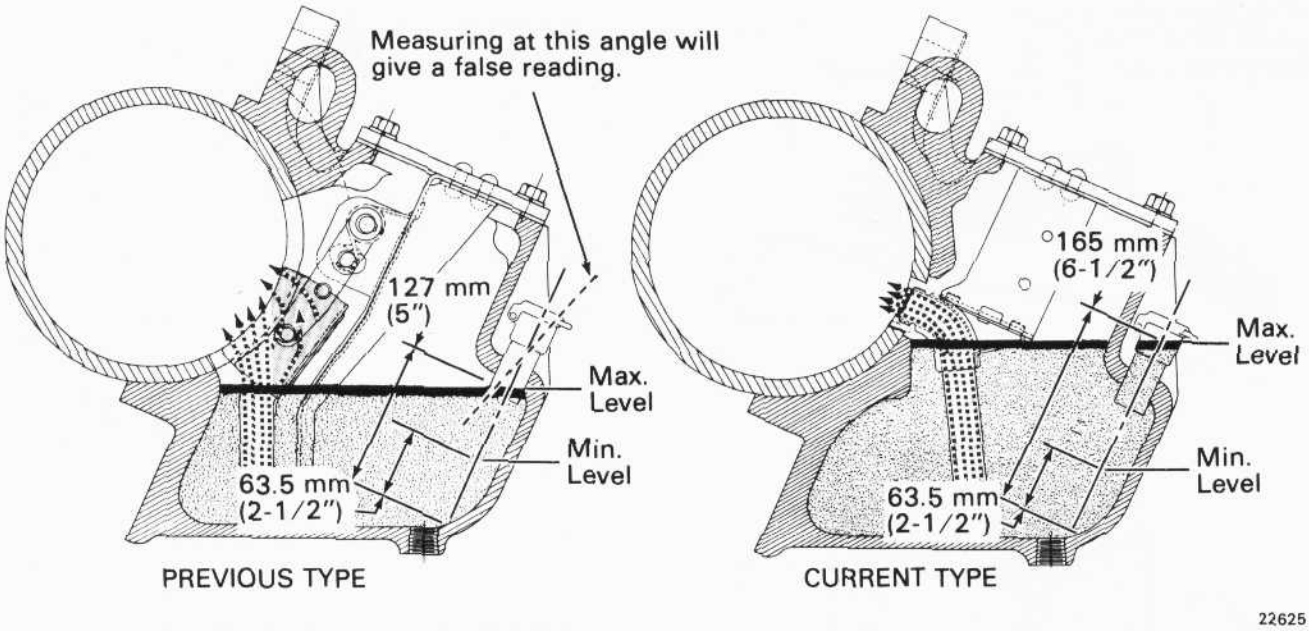

Fig.18 – Motor Support Bearing Oil Level

FELT WICK LUBRICATORS

Felt wick lubricators should be carefully inspected at wheel turning time, or more frequently if service dictates. Cleaned and re-qualified wicks should be installed as directed by applicable Scheduled Maintenance Program, preferably prior to the winter season.

NOTE

A wick lubricator cleaning machine is available for cleaning, soaking, and storage of wicks. Refer to Service Data for cleaning machine part number.

Cleaning is accomplished by soaking the wicks in oil heated to 49° C to 60° C (120° F to 140° F). The contact surface of the wick may be cleaned by rubbing with an oil soaked rag. Light sludge may be removed by gently brushing with a soft bristle brush followed by rubbing with oil soaked rag as above. Refer to Maintenance Instruction 1756 for correct type of oil.

Use of wire brush can cause wick damage, and is therefore not recommended. If solvents are used, the wick must be dried and then thoroughly soaked in oil so that no solvent remains to dilute the oil.

After cleaning, the felt wick assemblies should be inspected to determine if they are in satisfactory condition for continued service. The following points should be observed:

1. Wicks should be discarded if they have hardened, glazed, burned, or have excessive taper wear on the contact surfaces.

   Packing or glazing may be checked by squeezing the edges of the contact face with the fingers to cause oil to pool on the face. If oil does not quickly drain back into wick it should be discarded.

2. The wick contact surfaces should be free of irregularities. Slight depressions are permissable if they do not extend for the full length of the wick.

3. The narrow window type wick should be replaced when contact surface has worn down to within 6 mm (1/4") of the metal wick carrier. The wick should also be replaced with a new wick when the felt has elongated the rivet holes and is loose in the carrier.

4. Visually inspect the metal wick carrier assembly for warping, distortion or cracks which are causes for rejection. Check pinholes and pins for wear and replace parts if worn more than 0.30 mm (.012") over new assembly.

5. Check wide window support bearing lubricator spring pressure by placing a weight on the wick assembly as shown in Fig. 19. Use a 3 kg (7 lb) weight for new assemblies and a 2 kg (5 lb) weight for used assemblies. The tail of the wick

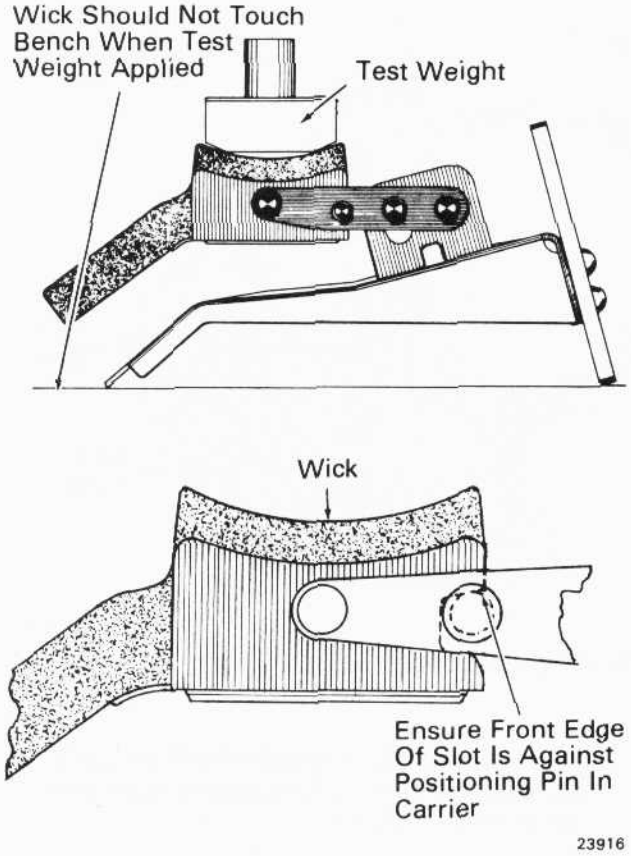

Fig.19 - Testing Wide Window Wick Lubricator Spring

should not touch the work bench when the weight is applied. Ensure the wick is positioned so that the front edge of the slot in the top of the wick is against the positioning pin in the carrier. Check the support bearing lubricator assembly with a 4 kg (8 lb) weight. The wick must move when the 4 kg (8 lb) weight is applied.

6. Check narrow window support bearing lubricator spring pressure by placing a weight on the wick assembly as shown in Fig. 20. The check should be made with the wick saturated with oil and all sliding parts clean and lubricated. The support bearing lubricator spring should be able to raise a 0.9 kg (2 lb) weight placed on the contact surface after the wick is depressed.

7. All early style flat or constant-pressure-type narrow window support bearing wick lubricator springs should be inspected for cracks near rivet point. If any defective or cracked springs are found, the assembly should be replaced with a wick conversion kit. Refer to Service Data for part number.

NOTE

New wicks have been oil impregnated prior to shipment from the factory and are ready to be

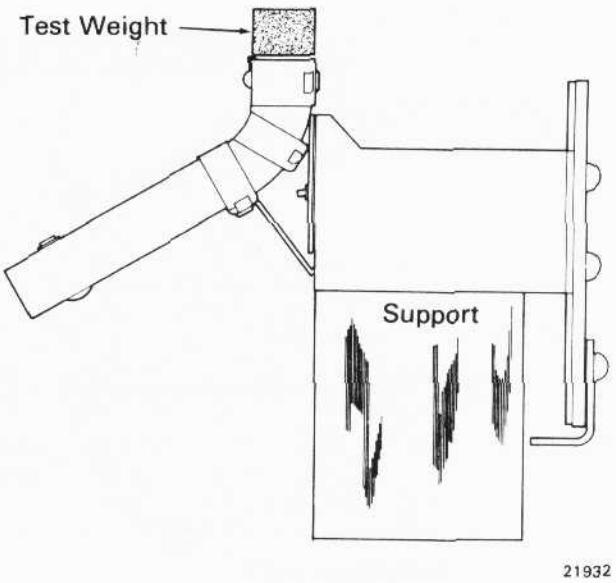

Fig.20 - Testing Narrow Window Wick Lubricator Spring

applied without further preparation. However, if the wicks have become dry in storage, resoak wicks as instructed in Step 8.

8. Lubricator wicks must be impregnated with oil prior to use. Refer to Maintenance Instruction 1756 for oil specifications. Impregnate wicks as follows:

   a. Soak wicks for a minimum of 20 minutes in oil at room temperature or 10 minutes in oil heated to 71° C (160° F). Wicks should not be allowed to touch bottom of container when soaking in heated tank.

   b. Allow wicks to drain for 10 minutes to facilitate handling and installation. Do not drain longer than 10 minutes. Excessive draining is detrimental. Use care to keep wicks clean while handling.

9. If there is evidence that water has been absorbed into wick, remove moisture as follows:

   a. Submerge wicks in oil heated to 104° C (220° F) for 8 hours.

   b. Allow wicks to cool, while submerged, until oil cools to room temperature.

   c. Remove wicks from tank and allow to drain for 24 hours. Perform Steps 8a and 8b.

REMOVING MOTOR SUPPORT BEARINGS

1. Run the locomotive over a pit.

2. If the bearing to be removed is on the gear side, it will be necessary to remove the gear case safety straps and drop the lower half of the gear case.

3. If the bearing to be removed is on the commutator end, remove the dust guard by removing clamp.

4. Drain the support bearing cap lubricating oil.

WARNING

When removing the support bearing cap, ensure cap is supported by crane or properly blocked. When bolts are removed, the cap may drop suddenly, causing personal injury.

5. Take out the four support bearing cap bolts.

6. Remove the support bearing cap. If the cap sticks, it can be loosened by tapping the cap.

7. Remove the axle shield and the lower half of the support bearing.

8. On dual or single seal support bearings, remove the seal(s) by extending the seal spring and removing spring from notch in seal.

9. To remove the upper half of the support bearing, jack the motor frame high enough to relieve the weight on the bearing and to free it from the key. Then revolve the upper half around the axle until it can be slipped off. If bearing sticks in the frame, it can be knocked loose by driving down on the flange with a hammer and wooden block.

SUPPORT BEARING INSPECTION

Bearing shells should be carefully inspected and replaced or returned to service depending on the following conditions.

1. Do not reuse bearing in which:

   a. The wear pattern extends beyond the window.

   b. The assembled diametrical clearance exceeds 1.17 mm (.046").

   c. The assembled lateral clearance exceeds 5 mm (3/16").

   d. The maximum axle diameter reduction exceeds 1.6 mm (1/16"). Refer to Replacement Support Bearings paragraphs which follows.

   e. There is evidence of babbitt shelling, overheating, or fatigue cracks.

2. Remove foreign particles imbedded in the babbitt.

3. Check condition of flange lubricators. If flange lubricators are worn, contaminated, or damaged, replace with new lubricators.

4. On dual or single seal support bearings, check condition of seals and seal springs. If worn or damaged, replace with new seals.

5. Reused bearings should be free of nicks and scratches. Scrape local areas lightly with a flat scraper and polish with fine abrasive coated screen or crocus cloth.

   Select the best quality bearings for use at the P.E. since it is most heavily loaded.

Before replacing bearings that show signs of having been overheated, the cause should be determined and corrected. The following points should be checked:

1. Insufficient lubricating oil in the support bearing cap.

2. Use of improper or contaminated lubricating oil.

3. Insufficient bearing clearance.

4. Misalignment of bearing shells.

5. Dirt or other foreign substances working into the bearing.

6. Wick lubricator surface fouled with dirt, or glazed.

7. Damaged or improperly operating wick lubricator assembly.

8. Poor motor support bearing surface finish at axle journal. Refer to Maintenance Instruction 1518.

In the event that the bearing has run extremely hot, it is likely that the axle bores have been distorted and the traction motor heated sufficiently to cause

damage to the frame, bearings and field windings. Suspicion of any of these items having occurred will necessitate removal of the motor for thorough inspection. Particular attention should be paid the motor armature bearings as the heat may have dissipated the grease. Traction motor removal is covered later in this bulletin.

REPLACEMENT SUPPORT BEARINGS

The maximum axle diameter reduction at the support bearings should not exceed 1.6 mm (1/16″) due to the axle loading on some locomotives. However, 0.8 mm, 1.6 mm, 2.4 mm, and 3.2 mm (1/32″, 1/16″, 3/32″, and 1/8″) undersize support bearings are available for railroads wanting bearings below the recommended minimum undersize of 1.6 mm (1/16″). These undersize bearings have standard size flanges. Refer to Service Data for undersize bearing part numbers.

Bearings are also available with standard bores and 0.8 mm or 1.6 mm (1/32″ or 1/16″) oversize flange thickness which may be used to keep within the lateral measurements specified. To prevent inadvertently applying such bearings, the flanges are stamped with the oversize designation and painted red. An oversize bearing flange may be used on one axle with a standard or another oversize bearing flange in order to obtain proper lateral dimension. Refer to Service Data for oversize flange bearing part numbers.

Current traction motors are equipped with a four groove, dual seal (seals on inboard and outboard sides) support bearing, Fig. 21, to minimize support bearing oil leakage. The new support bearing can be used on any model D37 through D87 traction motor using the present wick lubricator 8277771. The new support bearing is available as a replacement part. Sealing is accomplished by nylon rings that clip onto and rotate with the axle in circumferential grooves machined in the bearing. Oil that would normally flow out of the bearing ends is retained by the seal rings and pumped back to the reservoir through a drilled passage from the seal groove to the wick window. The dual seal bearing has an "L" shaped felt lubricator to supply flange lubrication.

With the exception that the oil seal rings must be installed before the lower or window half of the bearing is assembled, the bearing installation procedure is unchanged. After the upper bearing half and axle are in place, the seal ring, which is flexible, is spread and threaded into the seal groove and a tension spring is extended and snapped into place. Do not clip the seal rings around the axle before the upper bearing is in place.

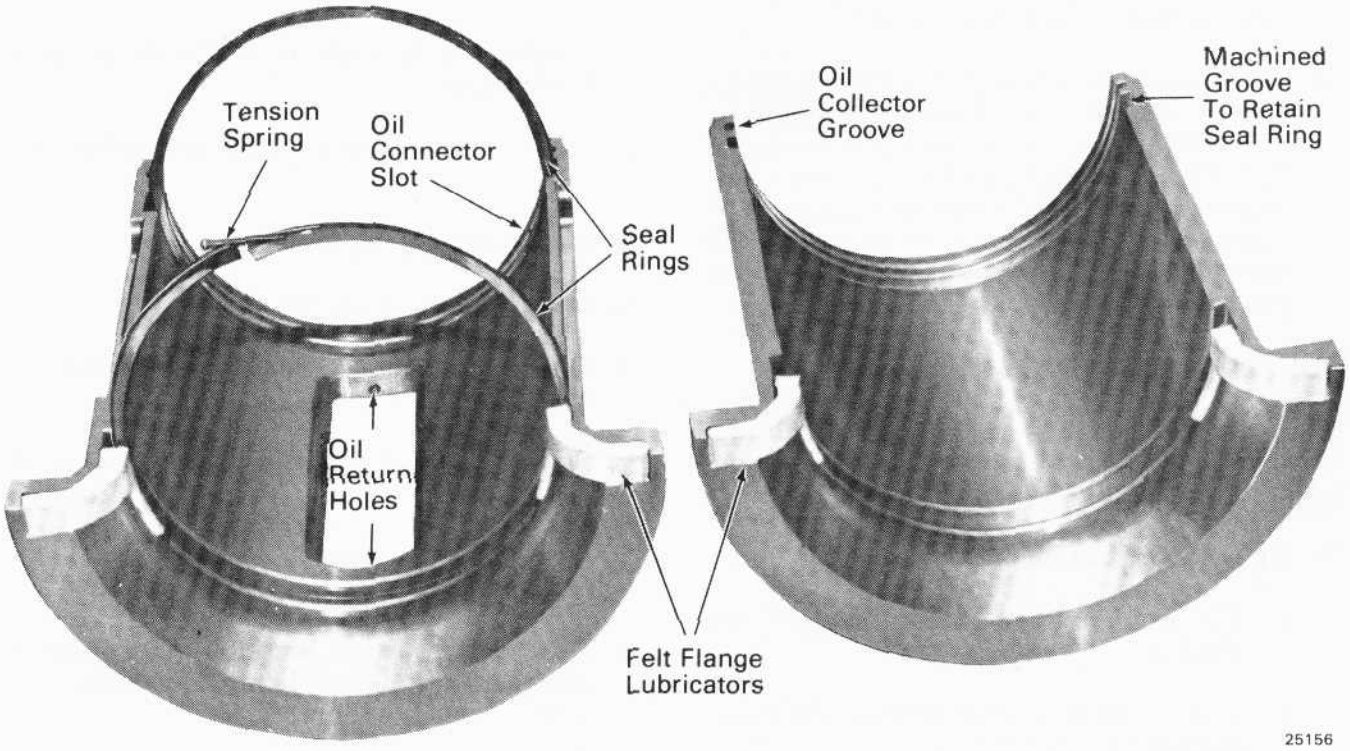

Fig.21 – Dual Seal Support Bearing

INSTALLING MOTOR SUPPORT BEARINGS

1. Ensure all parts are clean, particularily the bearing shells, seats, axles, caps, and seal rings (if so equipped).

2. Check bearing serial numbers. Bearings must be installed in matched sets.

3. Apply recommended lubricating oil to the inside diameter of the bearing shells and to the axle bearing surfaces. Install the upper half of the support bearing.

4. On dual and single seal support bearings, the bearings must have the seal(s) installed before the lower or window half of the bearing is in place.

   a. Spread the seal ring and thread into the 14 mm (9/16") bearing seal groove(s) as shown in Fig. 22.

   b. Extend the seal ring spring and snap in place in notch in seal ring.

5. Install lower half of the support bearing. Ensure bearing shell flanges contact the mating surface on the motor frame to prevent possible lateral movement.

6. Install axle shield over the axle between the two support bearings. The shield serves to prevent dirt from entering the bearing surfaces.

SUPPORT BEARING CAPS

The support bearing caps are machined and line bored to size when mounted on the traction motor with a 0.46 mm (.018") shim inserted between the cap and motor frame. When the motor is mounted in a truck, a 0.25 mm (.010") shim is used in fastening the cap to the frame, Fig. 22, thus giving a 0.20 mm (.008") clamp fit or squeeze to the axle bearing shells. The shim must be installed with cutout side turned out on upper and lower split line, Fig. 22.

Line boring of the caps to the motor frame is necessary to secure the accuracy of bearing fit required. The caps are not interchangeable with each other on a given motor or with caps of other motors. To ensure that they are matched to the proper motor and location, they are stamped with a serial number matching the motor frame number.

Support bearing caps that have been removed should be thoroughly washed in a suitable solvent. After cleaning and drying, the cap may be tested for leaks by painting the outside with chalk dust mixed with water. When dry, fill with kerosene and allow to stand for one hour, then observe for leaks.

INSTALLING SUPPORT BEARING CAPS

Current model frames have a 1-3/8"-7 thread for the support bearing cap bolts, eliminating the nut.

Current model support bearing caps have a 152 mm (6") long bolt 9095753 with a hardened spacer on the lower pinion side support bearing cap position. Refer to Fig. 23. Spacer 9318880 is used for cast frame motors and spacer 9318786 is used for fabricated frame motors. The longer bolt allows for increased stretch over the former 76 mm (3") bolt 8242193. The longer bolt and spacer are recommended in areas where the former bolt loosened in service. The increased stretch (2-1/2 times greater) decreases the effect of the initial stretch losses. The longer bolt is interchangeable with the 76 mm (3") bolt and is torqued to the same value.

Bolts 8135061 and flat washers 8495681 are used on the other two pinion end and the four commutator end support bearing cap bolt positions on current models. The flat washer has a larger and smoother seating area which results in a higher clamp load. The current bolt and flat washer are directly interchanged interchangeable with the former bolt and lockwasher. The current bolt has class 3 threads instead of class 5 threads, eliminating the interference fit.

If the mounting spot face on the support bearing cap is galled, the mounting spot face should be welded and machined to the dimensions of Fig. 24.

The serial number on the support bearing cap and motor frame must correspond with each other.

Install support bearing caps as follows:

1. Install support bearing caps. Apply caps straight as rocking will distort splines and pinch the bearings.

2. Apply a 0.25 mm (.010") shim as shown in Fig. 22.

3. Drive a wedge between the wheel (or gear) and the traction motor frame at the opposite end of the frame to take up clearance and to ensure firm contact between the bearing flange and the motor frame and cap.

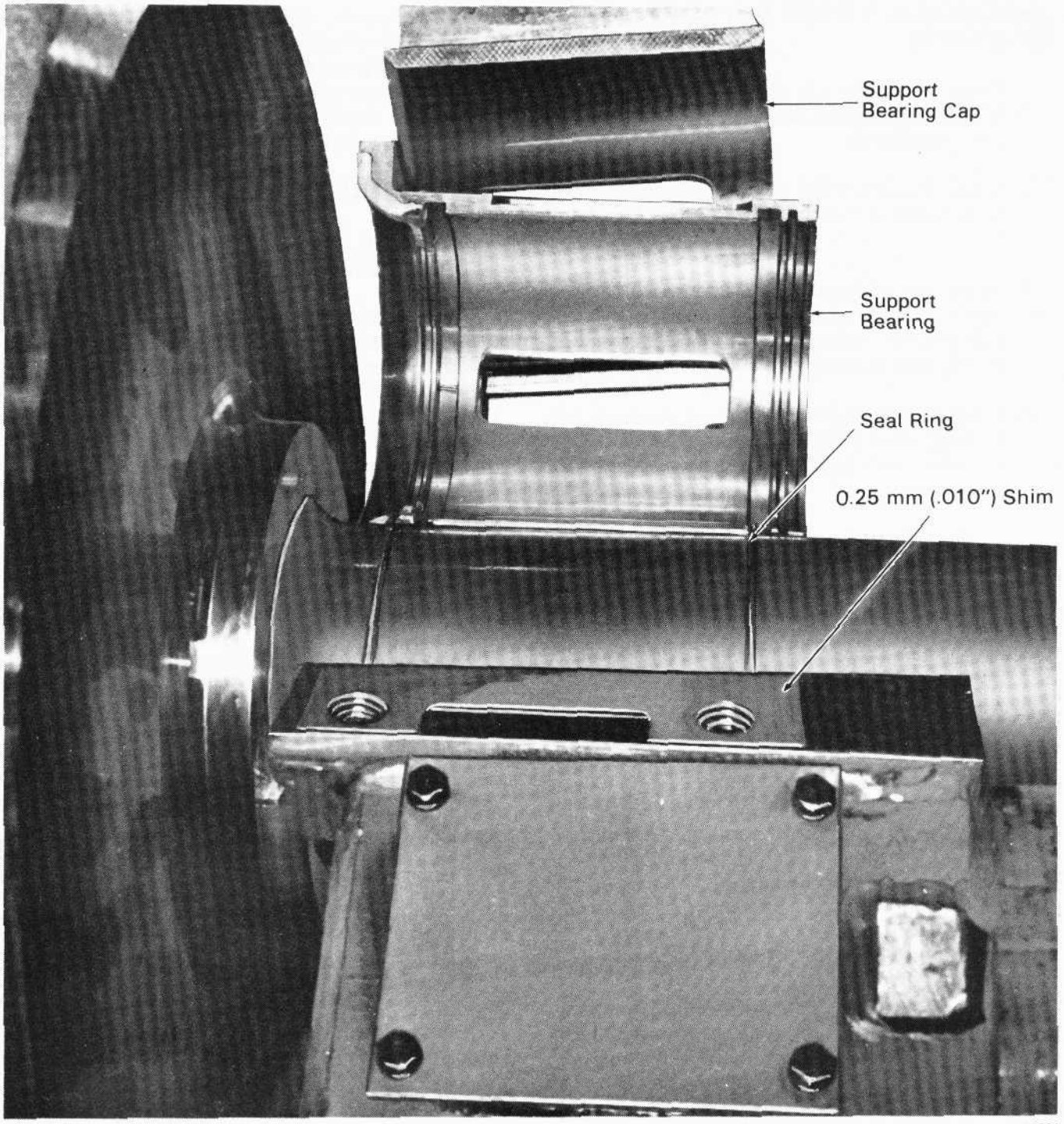

25221

Fig.22 – Support Bearing And Support Bearing Cap Assembly

4. Install proper washers and lubricate bolt threads and under bolt head with Texaco Threadtex.

5. Tighten bolts to 1491 – 1627 N·m (1100 – 1200 ft-lbs) torque. Ensure cap is not cocked in the motor frame.

6. Check lateral clearance. Refer to Fig. 25.

Maximum clearance between the bearing flange and the support bearing cap is 0.13 mm (.005").

Minimum clearance between the gear hub face and support bearing flange when axle assembly is pushed up against the bearing flange on the wheel end is 1 mm (.040").

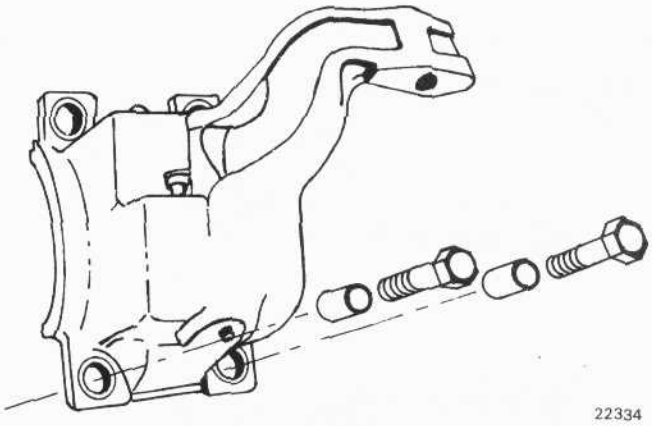

Fig.23 – Lower Pinion End Support Bearing Cap Bolts And Spacers

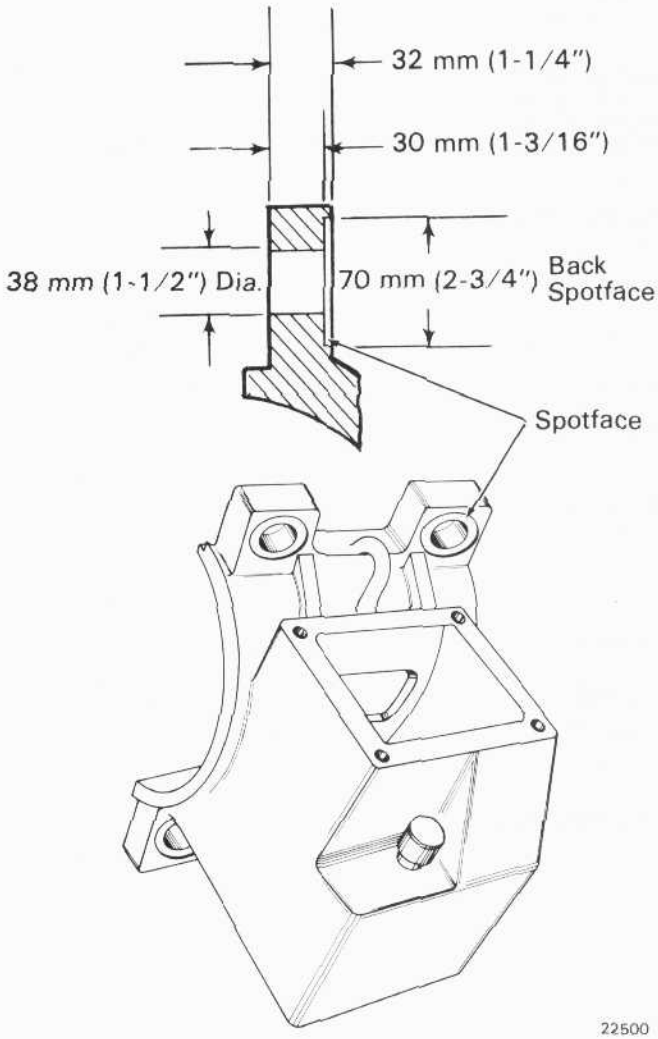

Fig.24 – Support Bearing Cap Mounting Spot Face Remachining

7. Check radial clearance. Refer to Fig. 25.

   Position axle so that support bearing window is at top dead center position. Insert a long, narrow feeler gauge through the support bearing window, at the center of the window, to a depth of 25 mm to 51 mm (1" to 2") between the axle and the bearing. Radial bearing clearance must not be less than 0.36 mm (.014").

8. The molded rubber dust guard is used to keep dirt and grit out of the support bearing. Check the dust guard for signs of wear, cracks, or deterioration before assembly. Replace dust guard with a new dust guard if required. Install dust guard over the commutator end support bearing flange and the wheel hub and hold in place with steel clamp as shown in Fig. 26.

   Ensure there is good contact between the dust guard and the hub of the wheel. Install dust guard with the two molded buttons of the dust guard mating with the two holes in the support bearing flange and with the split opening of the dust guard located towards the bottom of the traction motor (towards the rail).

9. Apply the previously soaked felt wick lubricator assemblies to the support bearing caps. Ensure wicks are contacting axle surface. Check through the window in the support bearing and the support bearing cap.

10. Pour oil over felt wick lubricators, filling reservoir to proper level with recommended lubricating oil per Maintenance Instruction 1756.

TRACTION MOTOR REMOVAL

REMOVAL OF WHEELS AND MOTOR ASSEMBLY FROM TRUCK WITH TRUCK UNDER LOCOMOTIVE

1. Remove cleats holding motor leads to underframe.

2. Loosen and slide traction motor connector covers along the motor leads.

3. Disconnect all of the motor lead connectors, taking care to see that all leads are plainly marked so there will be no difficulty in identifying them when they are reconnected.

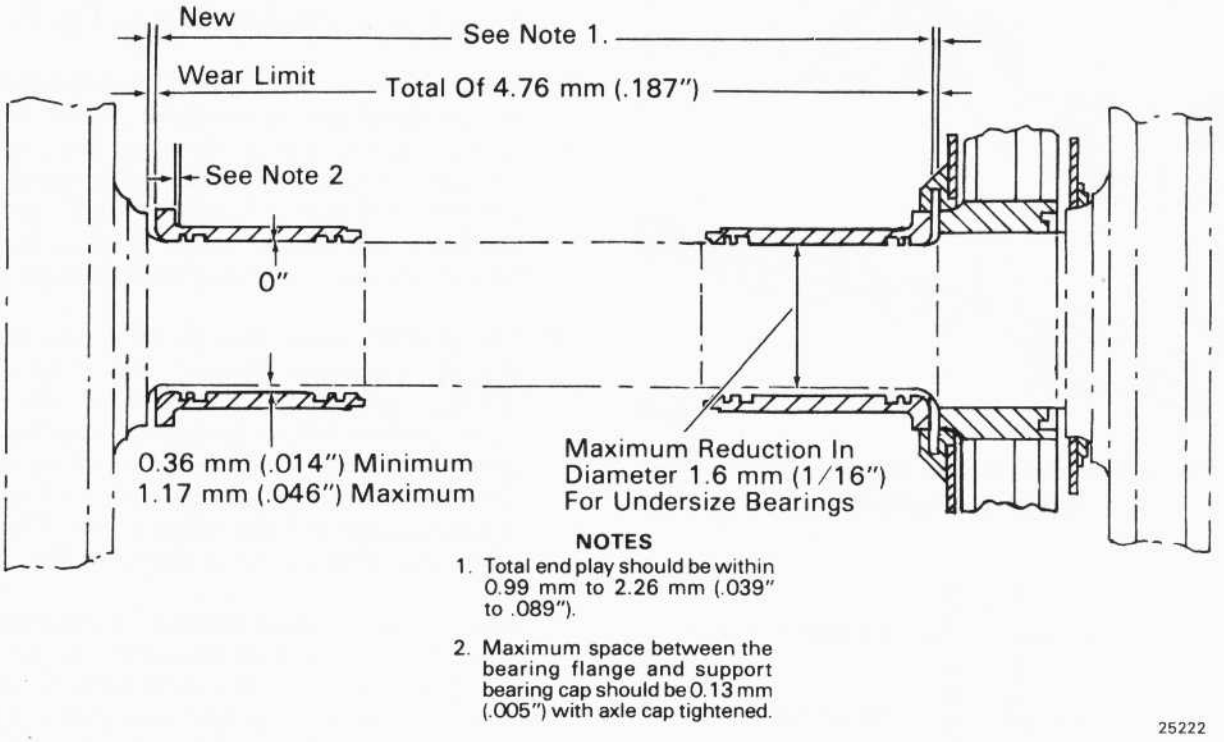

Fig.25 – Support Bearing Clearance

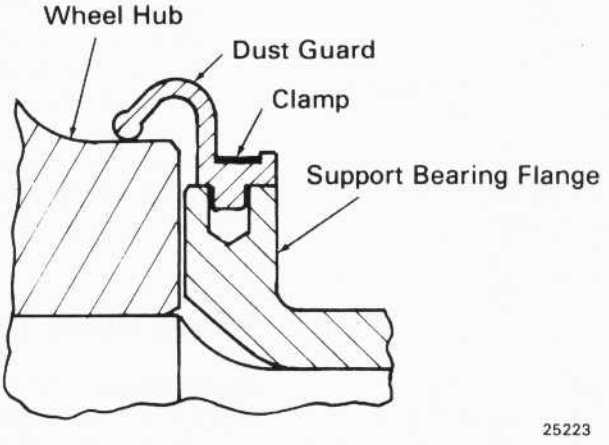

Fig.26 – Dust Guard Installation

4. Remove the flexible air duct on commutator end of motor.

5. Remove brake rigging from wheels to be dropped.

6. Block truck with jacks on both ends.

7. Remove the pedestal tie bar from both sides of truck on wheels to be removed.

8. Remove bottom pin keeper which holds motor nose in place on the nose suspension assembly as follows:

   a. Place a jack under motor frame and compress the motor suspension assembly.

   b. After compressing the suspension pack, place horseshoe shaped washers between the top spring holder and the heads of the spring holder bolts.

   c. Block under the traction motor before removing jack.

   d. Remove the bottom pin keeper which holds suspension assembly in place. Be sure to remove the pins which hold the spring holder and springs to truck frame.

   e. Remove the rubber suspension assembly by sliding it out from between motor and truck.

9. The motor and a pair of wheels are ready to be removed from the truck with a drop table.

REMOVAL OF TRACTION MOTOR FROM TRUCK WITH TRUCK REMOVED FROM LOCOMOTIVE

1. Remove cleats holding motor leads to underframe.

2. Slide the insulating tubes covering the connections along the motor leads.

3. Disconnect all of the motor lead connectors, taking care to see that all leads are plainly marked so there will be no difficulty in identifying them when they are reconnected.

4. Traction motor is now free and can be removed with truck

5. Remove the dust guard on the commutator end by removing clamp.

6. Remove the bolts that secure the gear case.

7. Pull out gear case clips.

8. The lower half of the gear case will drop down and the upper half can be lifted off.

9. Remove the support bearing cap bolts, the caps, the axle shield and the outside bearing shell. On dual or single seal support bearings, remove the seal(s) by extending the seal spring and removing spring from notch in seal.

10. Remove the bolts on the motor side of the flexible air duct.

11. Remove bottom pin keeper which holds motor nose in place on the nose suspension assembly. Refer to Removal Of Wheels And Motor Assembly From Truck With Truck Under Locomotive procedure, Step 8.

12. Lift the motor out of the truck with a crane, hooking the lifting chains into the bails on the nose side of the motor frame, Fig. 27. Rotate

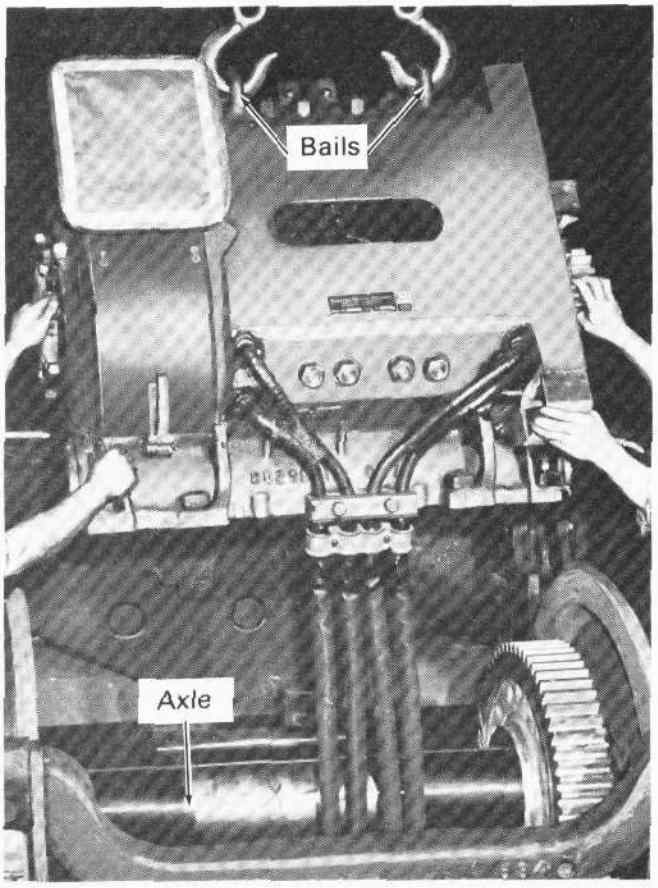

4287

Fig.27 – Removing Traction Motor

the motor around the axle sufficiently so that the lower lip of the support bearing housing will clear the axle and lift vertically out the truck. Do not allow the inside bearing shell to fall on the floor.

NOTE

When mounting or removing a traction motor from a truck, or while handling in the shop, be sure that the pinion protector is applied. Care should always be taken to prevent the pinion from accidentally striking some object, since due to the weight of the motor it is possible to damage the pinion as well as the commutator end bearing assembly on armature shaft.

TRACTION MOTOR NOSE SUSPENSION

Each time power is applied to the traction motors the torque reaction tends to rotate the motor on its bearings. This movement of the motor is arrested by heavy lugs on the motor frame coming in contact with the top and bottom of a nose suspension assembly that is fastened to the truck frame bolster.

Effective with the D57 traction motor an improved traction motor nose suspension assembly made of resilient rubber pads and steel plates, Fig. 28, was introduced. This assembly is completely interchangeable with the previously used coil springs, and uses the same spring holders, wear plates, pins and bolts.

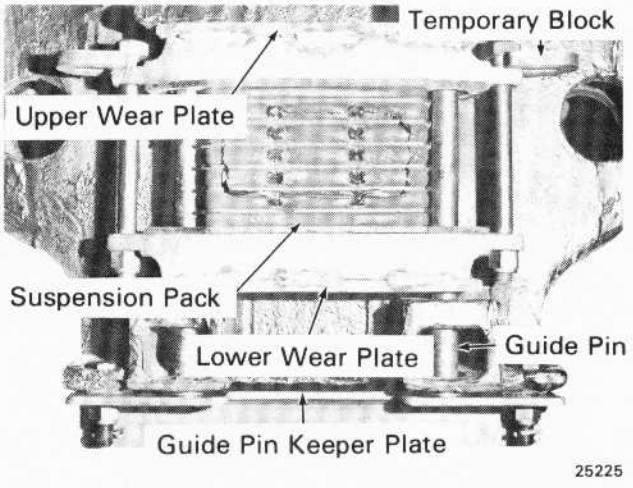

Fig.28 – Traction Motor Nose Suspension Assembly

Current traction motors are equipped with a nose support guide pin that is longer and completely fills the upper guide hole in the truck frame as shown in Fig. 29.

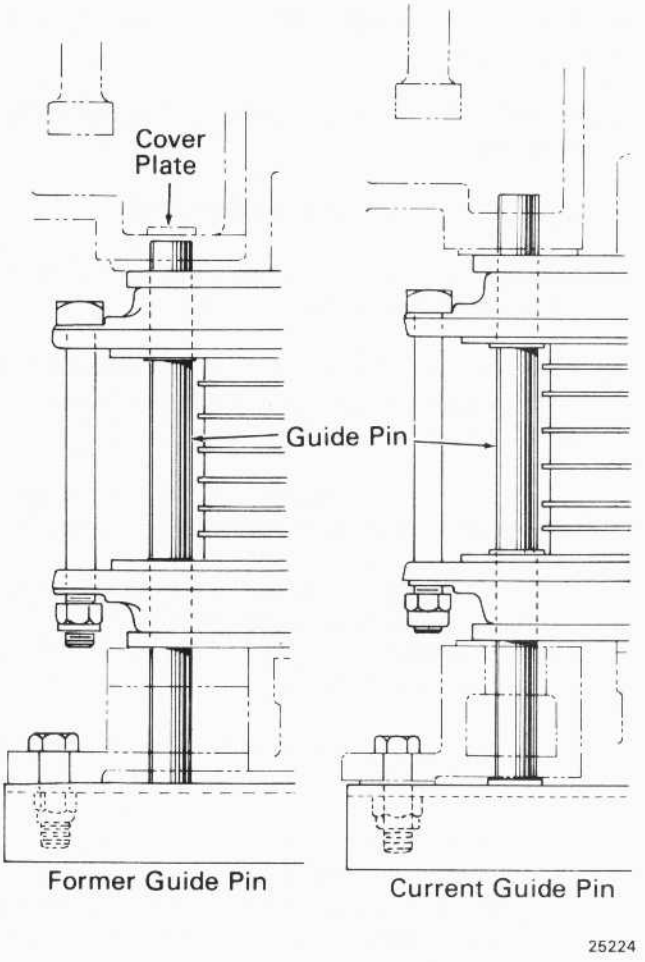

Fig.29 – Traction Motor Nose Support Guide Pin

To install the new pin requires the removal of the small metal cover plate that is welded over the upper guide pin hole. The cover plate can be removed by air carbon arc gouging and grinding. Ensure the circumference of the guide pin hole is free of projections. The new pins should be applied in pairs.

The wear plates on the suspension assembly are subjected to severe shocks and tremendous pressures, causing them to wear, resulting in free movement between the traction motor frame and the suspension assembly. As this free movement increases, due to wear, the severity of the shocks increases, especially if the wheels slip or during rapid changes of torque, such as applying sand during a slip.

It is recommended that wear plates be periodically reconditioned to ensure not more than 6 mm (1/4") free movement in the traction motor nose suspension to obtain maximum cushioning effect.

Traction motor frame assemblies are equipped with manganese steel nose suspension wear plates, Fig. 30.

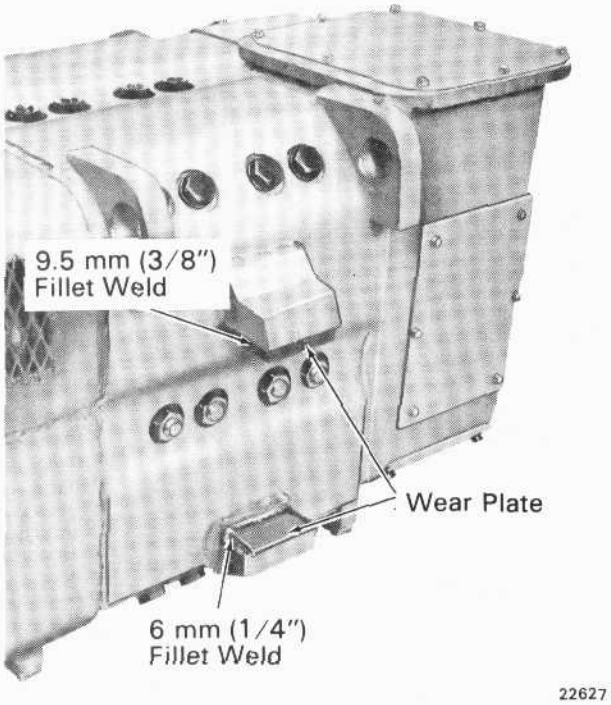

Fig.30 – Traction Motor Nose Suspension *Wear Plates*

The nose wear plate on the motor suspension nose *on older models is held in place by two 19 mm (3/4")* diameter, 102 mm (4") long rivets, and wear plates on current models are welded in place. When a wear plate has worn 2.4 mm (3/32") off its original thickness it should be replaced. Refer to Nose Suspension Lug And Wear Plate Inspection And Replacement Procedure And Wear Plate Welding Procedure which follows. When motor suspension pack wear plates have worn 1.6 mm (1/16") maximum, the plates should be replaced. There should be no wear on the vertical face of the truck transom supporting lugs. If there is, it indicates the lateral clearance in the journal boxes is too great and the journal boxes should be shimmed. Refer to Maintenance Instruction 1552 for journal box information.

NOSE SUSPENSION LUG AND WEAR PLATE INSPECTION AND REPLACEMENT PROCEDURE

If the distance between wear plate and lower suspension lug machined surface is more than 307.18 mm (12-3/32"), refer to Fig. 31 and perform the following procedure.

1. Check the lower suspension lug dimension from horizontal centerline of motor. If dimension is greater than limits of Fig. 31, area should be milled to dimension of Fig. 31 and a 6.35 mm *(.250") wear plate welded to suspension lug.* Refer to Wear Plate Welding Procedure which follows. It is not necessary to maintain the 45° chamfer on lower suspension lug as shown in *Fig. 31, but maintain the 374.6 mm (14-3/4")* dimension from vertical centerline of motor as shown in Fig. 31.

2. *If the lower suspension lug is within tolerance,* the 19.05 mm (.750") upper suspension lug wear plate must be replaced. If upper suspension lug is undersize, build up with weld and re-machine *to dimension of Fig. 31. Use only* A.W.S. E-7016 stick electrode. Refer to Wear Plate Welding Procedure which follows.

NOTE

Upper suspension lug is not a normal wear area, but if for any reason such as a loose wear *plate pounding the lug, the suspension lug* must be welded and re-machined.

WEAR PLATE WELDING PROCEDURE

The proper preparation of motor frame surface is very important to successful application of the wear plates. The frame surface must be smooth and flat. Remove any weld beads or high spots. If the nose bracket face dimension is not within tolerance of Fig. 31, the surface must be welded and re-machined. Perform the following procedure to install wear plates if required.

1. Position wear plates on frame and hold in place with a hydraulic jack which exerts a force of 4.5 to 7.3 tonnes (5 to 8 tons).

2. Check wear plate fit to frame with a 0.08 mm (.003") shim. Shim should not enter more than 13 mm (1/2") at any point between the frame and the pad. Excess gap can cause weld to fatigue.

3. Weld wear plates to frame using E-Fe-Mn-A welding electrode. Ensure good penetration is obtained on both the frame and the wear plate.

4. Allow weld to cool for a new minutes before removing jack. Check the plate fit to frame with a 0.08 mm (.003") shim.

5. Check the distance between the wear plates. The distance should be a nominal 306.70 mm (12.075").

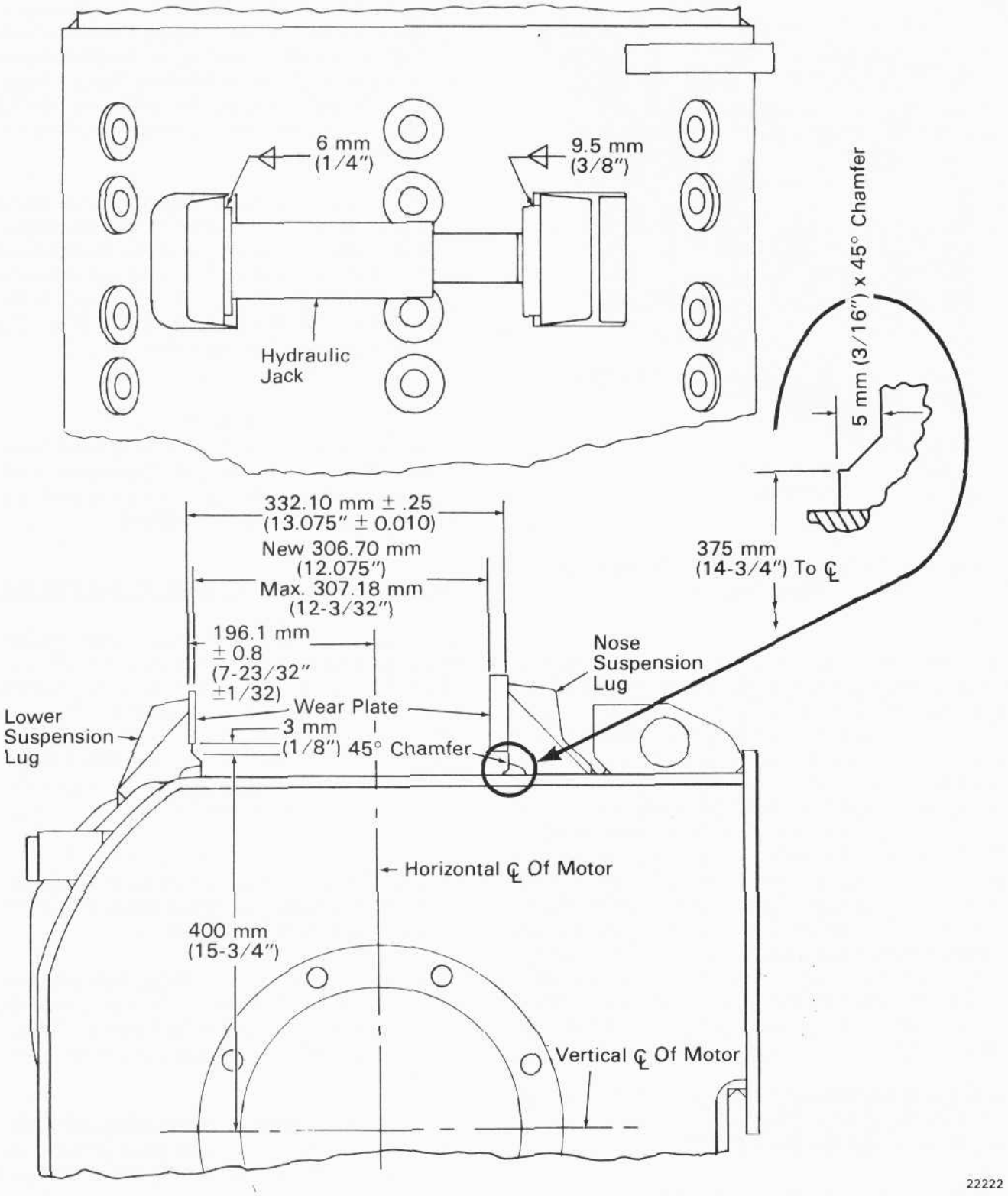

Fig.31 – Nose Suspension Lug And Wear Plates

PINIONS

The pinion mounted on the traction motor armature shaft is carburized, which provides an extremely hard outer surface yet retains a desired soft core. The number of teeth on the pinion and mating axle gear determine the locomotive gear ratio. Various gear ratios are available to suit specific locomotive service requirements. Pinions will vary from 12 teeth to 25 teeth depending upon installation. The traction motor with a 12 tooth pinion is referred to as an "E" model. Since the diameter of 12 tooth pinion is small, it is made integral with the armature shaft; all other pinions are removable.

PINION REMOVAL

Pinions are heated and shrunk onto the shaft to provide the fit necessary to withstand the strain imposed in operation. The pinion is either removed by pulling off with a hydraulic puller or by "floating-off" by means of hydraulic pressure.

Refer to Service Data for special equipment required for pinion removal. The pinion is removed as follows:

PINION REMOVAL WITH HYDRAULIC PULLER

Remove the nut from end of armature shaft with a retaining nut wrench and handle, Fig. 32, or with an air impact wrench.

2. Clean threads in pinion and in pulling pilot.

3. Apply spacer between the end of the armature shaft and the ram of the puller to protect the shaft from possible damage.

4. Install threaded pilot and hydraulic puller assembly, Fig. 33, using a suitable hoist. The threaded pilot should enter the threaded portion of the pinion to its complete depth so threads will not strip.

WARNING

Remove hoist before attempting to pull pinion. Pinion releases suddenly and if left suspended on hoist, can swing violently.

Clear area in line with pinion to avoid damage to equipment or injury to personnel when pinion releases.

5. Pump hydraulic puller to build up pressure and remove pinion from shaft.

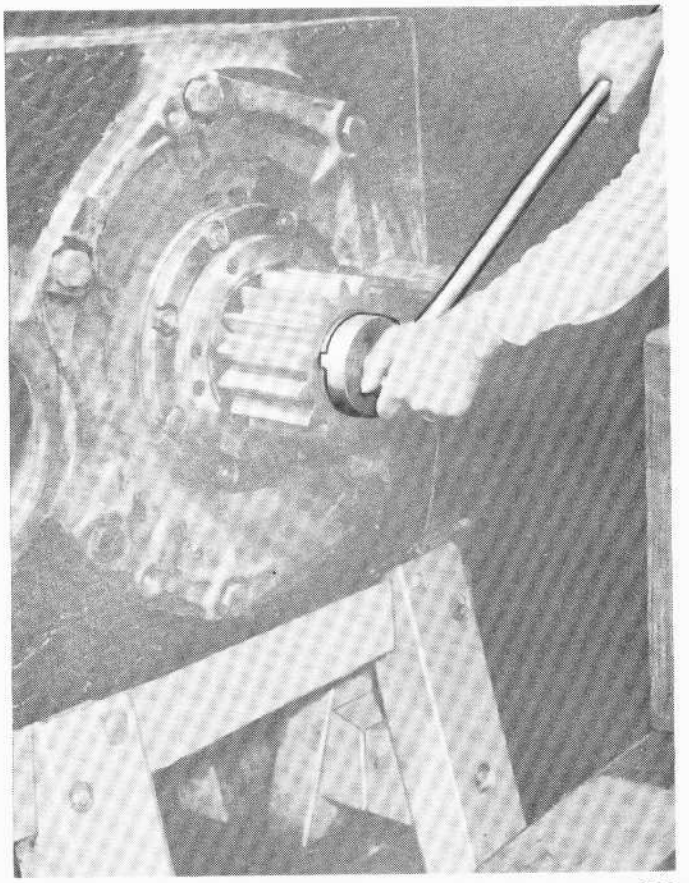

6322

Fig.32 - Removing Pinion Retaining Nut

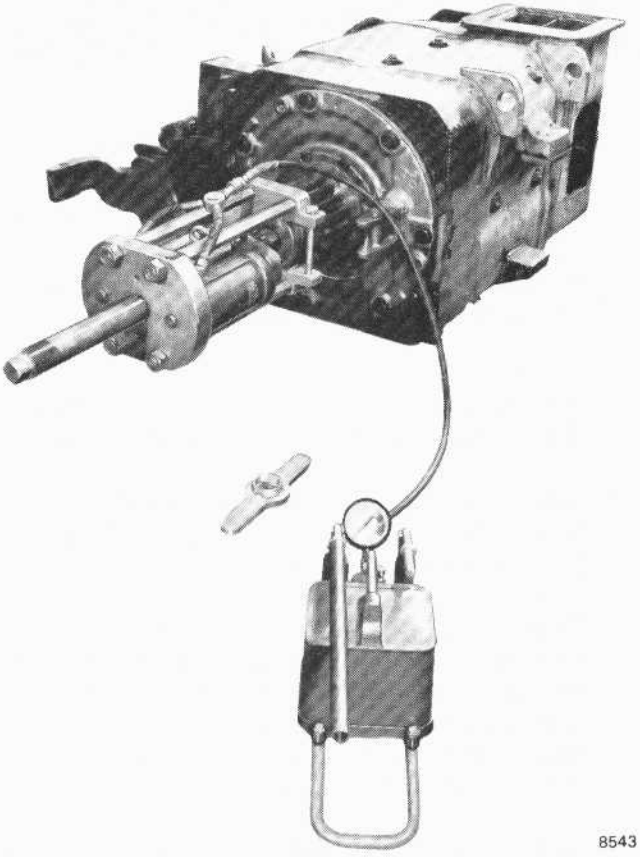

8543

Fig.33 - Hydraulic Pinion Puller

PINION REMOVAL BY FLOAT-OFF METHOD

The float-off method of pinion removal can be used on armature shafts which are manufactured with a groove around the shaft taper which is connected by drilled passages to a 1/2"-20 tapped hole in the center of the shaft, as shown in Fig. 34. The pinion is removed by applying high pressure oil through the drilled passages to the inside of the pinion bore, which results in the pinion being released from the shaft.

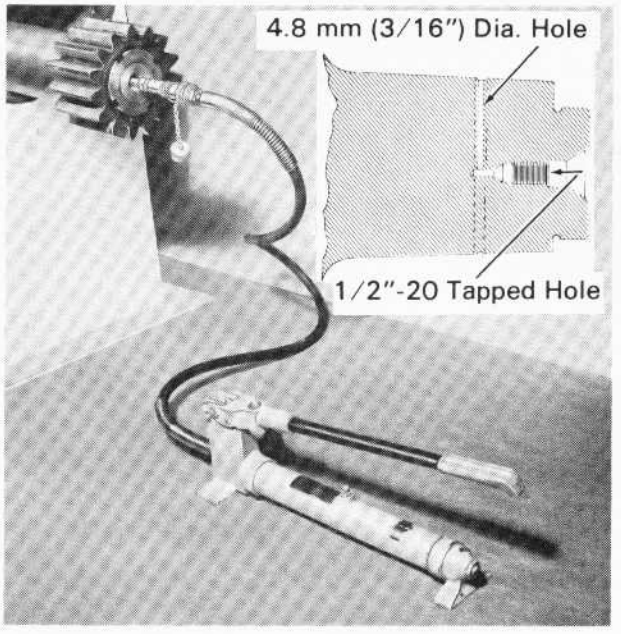

21903

Fig.34 – Float-Off Pinion Removal

1. Loosen the nut on the end of the armature shaft with a retaining nut wrench and handle, Fig. 32, or with an air impact wrench approximately one turn, but do not remove.

2. Clean the center of the armature shaft and remove 1/2"-20 socket head setscrew. Ensure the threads and pressure fitting seat are clean.

3. Screw adapter nipple into shaft and tighten to 35-40 N·m (25-30 ft-lbs). Do not overtighten as this will damage the shaft seat.

4. Connect adapter nipple to the hydraulic pump with high pressure hose assembly. Close screw on pump and operate lever to build up pressure. When pressure becomes great enough, pinion will be released from armature shaft and will move off against the retaining nut.

5. Remove equipment and replace setscrew in end of armature shaft.

PINION APPLICATION

It is essential that the pinion is properly mounted on the armature shaft to ensure it is fit with the proper tightness. Apply the pinion as follows:

1. Remove any burrs or scoring on armature shaft or in pinion bore by honing or cleaning away with Arkansas stone (novaculite) or with abrasive cloth no coarser than 320 grit.

2. Clean threads on armature shaft with a wire brush, or if threads are damaged, run on a thread chasing die. Apply retaining nut to shaft to check for proper fit.

3. Thoroughly clean pinion bore and tapered end of armature shaft where pinion will be mounted. The slightest bit of lint or dirt will hinder pinion application.

4. Check the contact between the pinion and shaft taper as follows:

   a. Apply a thin, even coat of Prussian (non-drying) bluing compound to the pinion bore with the fingers. A cloth should not be used since heavy deposits of bluing will not allow a true indication of fit.

   b. Place the pinion on the shaft carefully, avoiding undue rubbing. With the pinion held snug on the shaft, rotate pinion approximately one-eighth turn and back. Remove the pinion carefully and inspect the amount of bluing transferred to the shaft and the areas of contact.

      It is necessary that the pinion is in firm contact with the small end of the armature shaft taper. A 50% contact is expected, but if the two tapers are at opposite extremes of tolerance, it is required that the pinion is in firm contact with at least 20% at the small end of the armature shaft taper. The large end of the bore should not contact unless a line-to-line contact is obtained throughout the bore.

   c. If correction is required, polish the shaft with Arkansas stone (novaculite) or with abrasive cloth no coarser than 320 grit.

   d. Thoroughly clean and remove all traces of bluing from the shaft and pinion with a solvent and wipe dry with clean, disposable tissues.

5. With armature shaft and pinion at room temperature, lightly mount pinion on shaft to ensure proper alignment. Withdraw pinion about 12.7 mm (1/2") and then using both hands push firmly in place as far as it will go. Ensure pinion is mounted squarely on shaft.

6. Measure and record pinion position with respect to the shaft with a micrometer depth gauge, Fig. 35.

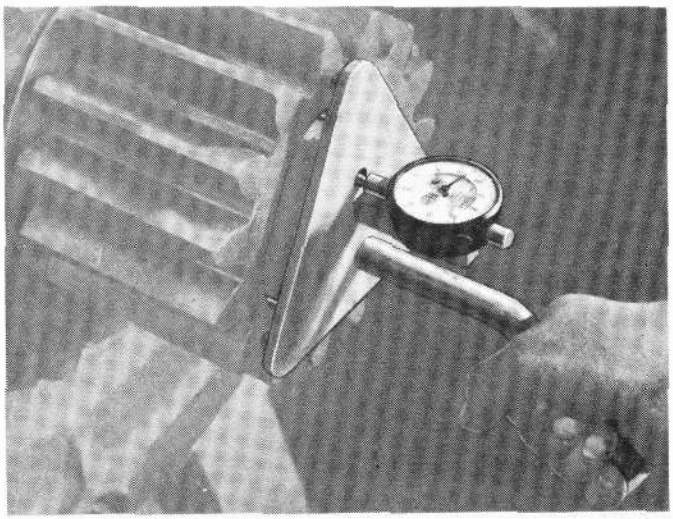

6527

Fig.35 - Measuring Pinion Advance

7. Mark the points of measurement on the pinion, then mark the end of the shaft and pinion to retain the same angular relationship when re-applying and for final installation.

8. Remove pinion. If this proves difficult, small steel wedges may be used between the pinion and the frame. To prevent damage to the bearing housing, a strip of copper should be placed between wedge and housing.

9. Repeat Step 4, using the mating marks previously made to ensure proper relationship of pinion and shaft.

10. Apply micrometer depth gauge to markings and again measure and record pinion position on the shaft. Compare readings to those previously taken in Step 6. A minimum of two such readings should be made to determine variations, if any, in readings. To be acceptable for final mounting, successive cold readings should not vary more than 0.05 mm to 0.08 mm (.002" to .003").

    If variation exceeds these limits, again carefully clean pinion bore and armature shaft to eliminate all possibility of dirt or contamination. If the variation is as much as 0.25 mm (.010"), the pinion fit to armature shaft must be checked by bluing and corrections made by lapping. It is necessary that the pinion is in firm contact with at least 20% at the small end of the armature shaft taper. The large end of the bore should not contact unless a line-to-line contact is obtained throughout the bore.

11. When cold mounting variations are within limits, the pinion may be heated with an induction heater, Fig. 36, for final mounting. Heat and mount the pinion as follows:

NOTE

In Step a, the use of liquid cleaner on the shaft and pinion bore increases the friction or holding power between the pinion and the shaft, preventing most pinion slippage. The liquid cleaner should not be used on larger pinions as it will make pinions extremely difficult to remove.

WARNING

Avoid excessive or prolonged inhalation of liquid cleaner mists or dust. Avoid eye contact repeated or prolonged skin contact. Liquid cleaner can cause eye and skin irritation.

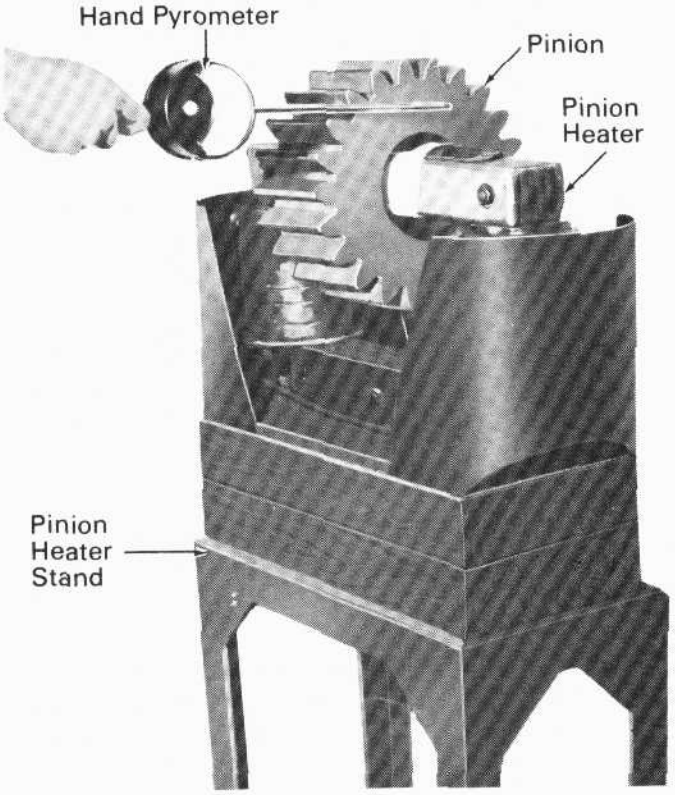

4069

Fig.36 - Induction Heater

a. When applying 15-tooth and smaller pinions to the armature shaft, the bore of the pinion must be brushed clean and liquid cleaner applied liberally with a clean brush. After approximately 15 seconds (the liquid cleaner must not be allowed to dry), use clean paper towels to carefully wipe the cleaner out of the bore, being careful not to touch the surface with the hands. Protect the pinion bore surface with a clean paper towel. Refer to Service Data for liquid cleaner part number.

   Just before pinion application (in Step c), liberally apply liquid cleaner to armature shaft with clean paper towels. Allow liquid cleaner to stand 15 seconds and wipe shaft surface with clean paper towels. Do not allow shaft or pinion surface treated with liquid cleaner to be exposed to dirt or oil and do not touch with the hands.

NOTE

The effectiveness of liquid cleaner is reduced after extended storage. Cleaner stability is at least 6 months if stored at temperatures below 24° C (75° F). Reduced stability will result if the cleaner is stored at higher temperatures.

b. Heat pinion to the temperature specified in Service Data. Check temperature at various points on the pinion with a hand pyrometer. Take readings ONLY when current to the induction heater is turned off. Pinion temperature should never exceed 232° C (450° F).

NOTE

Since a change of 1° C is equivalent to a change of 1.8° F, a 121° C rise in temperature is therefore equivalent to a rise of 218° F.

   As an example of proper model D77 heating, assume the shaft temperature is 24° C (75° F). The pinion should then be heated to obtain 145° C (293° F), which is the desired 121° C (218° F) rise in temperature over that of the shaft.

c. When pinion is heated to the proper temperature, mount the hot pinion on the shaft in the same position used for the cold mountings.

d. Measure pinion position with respect to the shaft with a micrometer depth gauge. Refer to Service Data for proper pinion advance. If pinion advance is not within limits specified in Service Data, the pinion will have to be removed and all preceding steps repeated after parts have cooled to room temperature.

e. Place the pinion retaining nut into the cup lockwasher.

NOTE

In Step f, reused pinion retaining nut should be checked for flatness prior to assembly, using a straightedge and feeler gauge. The dish, if any, should be noted so an additional 0.10 mm (.004″) dish can be determined in Step f.

f. After final correct mounting of the heated pinion, quickly tighten the pinion retaining nut (with cup lockwasher) before the shaft and pinion temperatures equalize. Check for tightness of the nut 10 minutes after application, by measuring nut dish 6.4 mm (1/4″) from inside the chamfer, using a straightedge and feeler gauge. A minimum dish of 0.10 mm (.004″) is necessary. If nut face dish is less than 0.10 mm (.004″), the nut must be retightened. A minimum dish of 0.08 mm (.003″) is required when nut face is checked cold.

g. Secure the pinion retaining nut by staking the cup lockwasher into the two notches in the pinion and stake the cup lockwasher into two notches of the retaining nut.

EXTERNAL LEAD AND CONNECTOR INSPECTION

1. Cable insulation should not be damaged, frayed, or worn. Carefully check areas where cables are clamped or subjected to abrasion.

2. Contact area of connectors should be free of protruding nicks and burrs. The connectors should have a smooth, flat surface.

3. There should be no broken strands of cable at point of entry into connector. Inspect solder at the top of the connector for cracks. The gap between the insulation and the connector should not be greater than 16 mm (5/8″).

4. Check grommets for deterioration, cracks, wear, and looseness to the frame.

5. The condemning limit of the external cable length without lugs is 1 168 mm (46″) minimum. The condemning length of the external cable length with lug is 1 253 mm (49-5/16″) minimum, measured from the outside edge of the cable clamp to the tip of the connector. Lead lengths are not to vary more than 38 mm (1-1/2″) between the longest lead and the shortest lead, but never shorter than the condemning limit.

EXTERNAL LEAD AND CONNECTOR REPAIR

1. If the motor does not have a grounding cable, Fig. 1, install cable as follows. Refer to Service Data for grounding cable and heat shrinkable tubing part numbers.

   a. Attach grounding cable as shown in Fig. 37.

   b. Ensure external lead cable is dry and free of oil, grease, foreign matter, and sharp edges.

   c. Position three sections of heat shrinkable tubing as shown in Fig. 37.

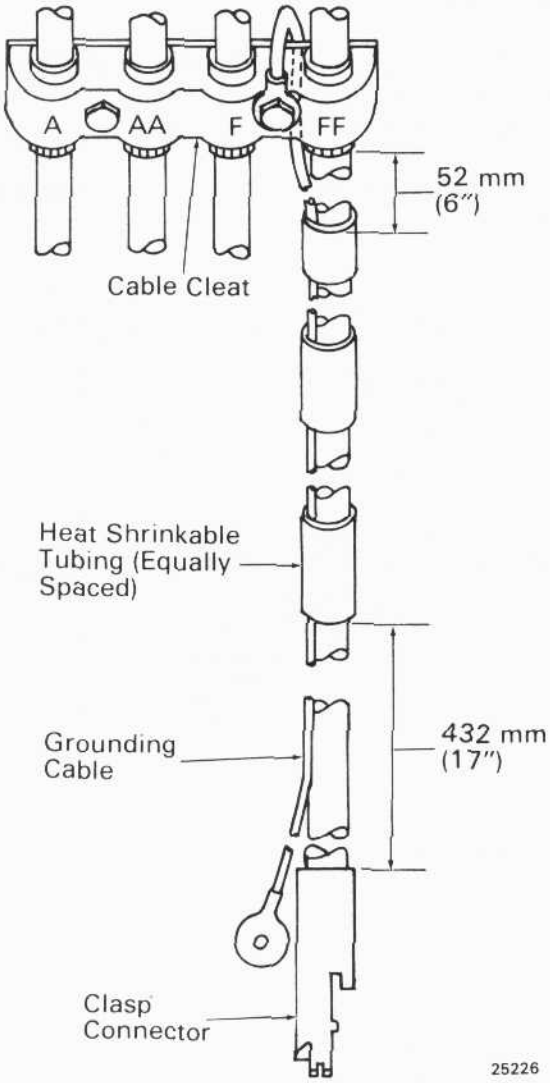

Fig.37 - External Lead Grounding Cable Application

   d. Apply heat to heat shrinkable tubing using a heat gun. Apply heat to the center of the tubing and work toward one end. Apply heat again to the center of the tubing and work toward the opposite end. This procedure will assure an equal distribution of the longitudinal shrinkage. Apply heat only long enough to allow tubing to assume contour of the cable. Application of additional heat will serve no useful purpose.

2. *Nicked or damaged insulation may be repaired* with heat shrinkable tubing. A deep nick in the insulation can be cleaned with alcohol and filled with RTV compound prior to applying the heat shrinkable tubing. Refer to previous Step 1d for heat shrinkable tubing application procedure. Refer to Service Data for RTV compound part number.

3. If cable grommets are deteriorated, cracked, *worn, or loose in the stator frame, replace with* new grommets and seal with caulking compound. Refer to Service Data for caulking compound part number.

SOLDERING CONNECTORS TO CABLE LEADS

NOTE

Refer to Service Data for material part numbers.

D87 clasp connector should be soldered with a high temperature solder (95% tin, 5% antimony). The other model clasp connectors should be soldered with a pure tin or tin base solder. Refer to Service Data for solder and flux part number.

Apply a clasp connector to cable end as follows:

1. Heat the connector with a 2500 watt capacity thermo-grip pliers to the point where the solder melts to free the connector. Remove the connector. Refer to Service Data for thermo-grip pliers part number.

2. *Heat the new connector with the thermo-grip* pliers to the point where solder melts. Flux and tin the inside of the connector.

NOTE

If a solder pot is available, tin and heat inside of connector by slowly pouring hot solder back and forth between the ladle and the connector. Solder the connector by placing connector into a holding fixture, apply heat with the thermo-grip pliers, and pour solder from ladle into the connector.

3. Heat the cable end with the thermo-grip pliers. Flux and tin cable end.

4. Insert connector into a holding fixture and apply heat with thermo-grip pliers. Fill the connector barrel 1/2 to 3/4 full of solder.

5. Insert tinned cable end slowly into barrel of connector. Fill connector to the top edge. Maintain an even temperature and compensate for shrinkage as the solder cools. Remove thermo-grip pliers. Allow cable and connector to air cool. DO NOT QUENCH.

SUPPORT BEARING MOISTURE SEAL

Railroads experiencing accumulation of moisture in support bearing oil reservoirs can relieve the condition by applying a bead of RTV silicone compound at the traction motor support bearing cap split line and at the edges of the axle shield as indicated in Fig. 38.

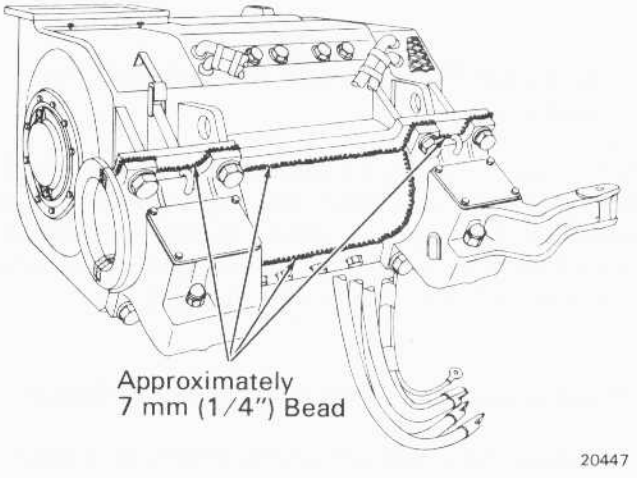

Fig.38 – Support Bearing Moisture Seal

RTV silicone compound has excellent resistance to deterioration from exposure to weather, and can be peeled away readily when traction motor maintenance is required. Sealing is normally performed at traction motor changeout, but no disassembly or loosening of axle cap bolts is required. It is merely necessary to thoroughly clean all areas to which the sealer will be applied, then wipe the area with a solvent which will leave no oil residue. Sealing can best be done using 12 oz. cartridge and a standard caulking gun.

The bead of sealant must cover both metal surfaces and completely cover the parting lines of the axle shield. Particular attention must be given to the parting line above the top support bearing cap bolts where water is most likely to enter. If necessary, a pointed tool can be used to press sealant into the parting line area.

SUPPORT BEARING OIL FILLER CAP

Current traction motor models have an improved oil filler cap 9333024 replacing oil filler cap 8319096. During overhaul it is recommended that the old cap be replaced with the new cap.

The old cap consists of a threaded metal base and a hinged flip top. The hinged top is susceptible to broken hinges and leakage.

The new cap, Fig. 39, is held firmly in place with a coil spring. The cap requires no maintenance and will last much longer than the old cap.

Both caps have 3/4" NPT thread for installation and are directly interchangeable.

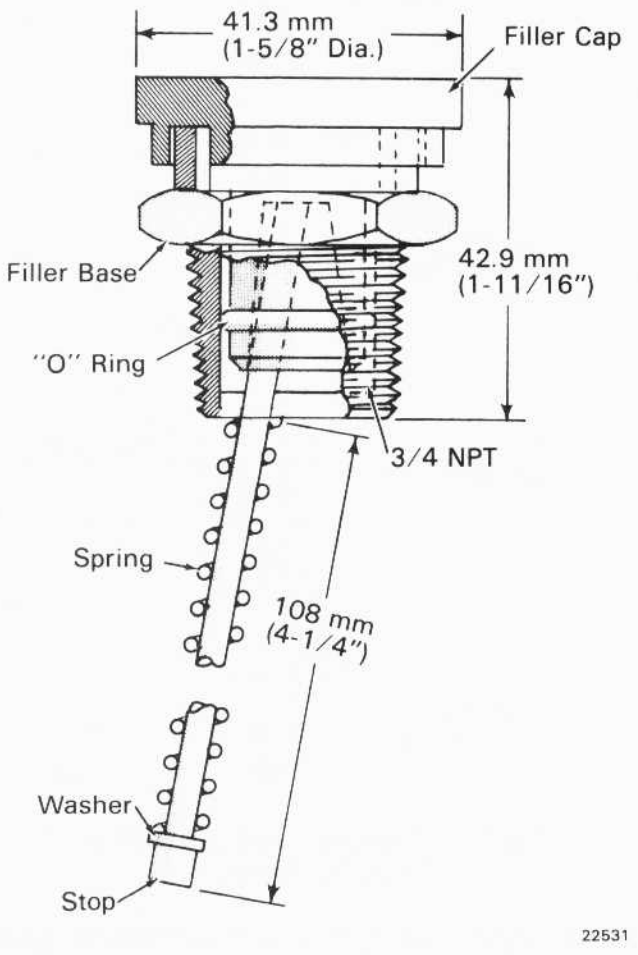

Fig.39 – Support Bearing Oil Filler Cap

CHECKING TRACTION MOTOR ROTATION

On "E" and "DD" type locomotives (except DDM45), each truck may be checked individually by isolating the power plant not being tested. Switchers can similarly be checked by using the truck cutout switch.

When rotation of all motors has been determined to be correct, the locomotive may be returned to service.

When installing traction motors, it is important to verify that cable connections have been properly made by checking motor rotation. Failure to do so may result in serious damage to the motors and generator if connections have been improperly made.

The wiring differences between the older motors and the current configurations is the connection between the "A" lead and the brush holder, and the connection between the interpole and the brush holder, Fig. 40. Some older models are recabled to the lastest wiring diagram when rebuilt by EMD.

The direction of motor rotation can be readily determined by observing the nose suspension when power is applied. The motor frame is restrained at this point by the nose suspension assembly, yet upward or downward movement, depending on motor rotation, may be observed.

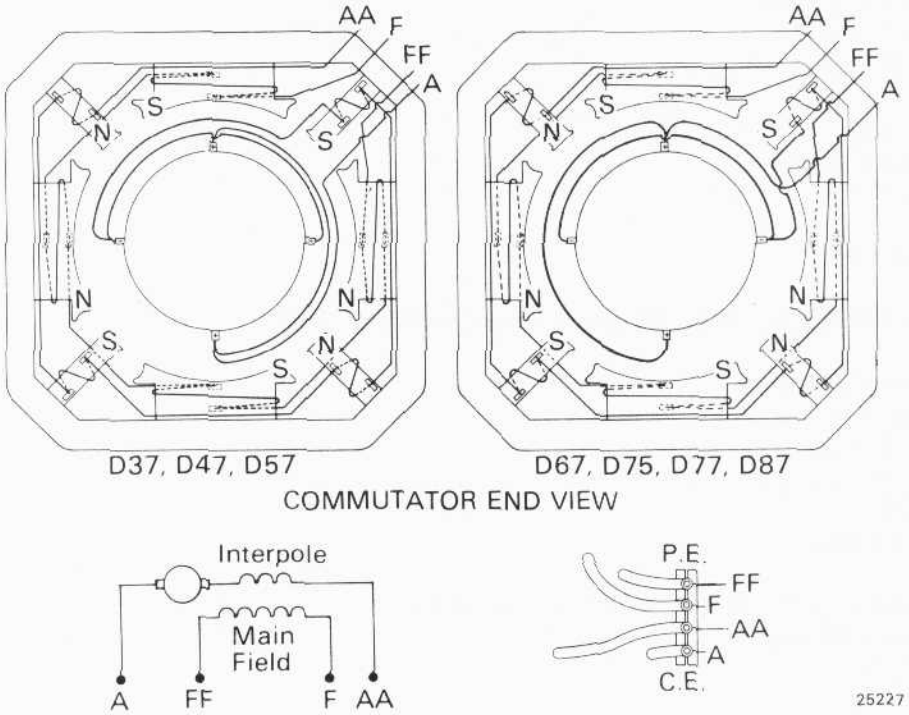

Fig.40 - Wiring Diagrams

SERVICE DATA

REFERENCES

Wheels, Axles, Axle Gears And Pinions . . . . . M.I. 1518
Traction Motor Gear Case Inspection And Repair . . . . . M.I. 1520

SPECIFICATIONS

D37, D47, D57 BRUSHES – With Coil Spring (Adjustable) Brush Holder

	Part No.
Two wafer, flat top 54 mm x 51 mm x 16 mm (2-1/8″ x 2″ x 5/8″) Grade DE-5	8215949
Two wafer, flat top 56 mm x 51 mm x 16 mm (2-3/16″ x 2″ x 5/8″) Grade AC-124	*9322055
Two wafer, flat top 56 mm x 51 mm x 16 mm (2-3/16″ x 2″ x 5/8″) Grade DE-7	*9322056

*Multiple Wear Lines

D37, D47, D57 BRUSHES – With Constant Pressure Brush Holder

Two wafer, with resilient pad 56 mm x 51 mm x 16 mm (2-3/16″ x 2″ x 5/8″)	
Grade DE-7	*9322054
Grade AC-124	*9322053

*Multiple Wear Lines

Three wafer, with resilient pad and floating center wafer 54 mm x 51 mm x 16 mm (2-1/8″ x 2″ x 5/8″) Grade DE-7	8403347

D67, D75, D77, D87 BRUSHES

Three wafer, with resilient pad and floating center wafer 62 mm x 51 mm x 16 mm (2-7/16″ x 2″ x 5/8″)	
Grade AC-124	*9322057
Grade DE-7	*9322058
Grade AC-100	*9322059

*Multiple Wear Lines

BRUSH WEAR LIMIT . . . . . Replace when spring pressure arm is 3 mm (1/8″) above brush box

BRUSH HOLDER SPRING PRESSURE

Coil Spring Type (at each finger)	4 - 5 kg (9 - 11 lbs)
Minimum completely worn brush	3 kg (7 lbs)
Constant Pressure Type	
New Spring (at each finger)	1.8 - 2.3 kg (4 - 5 lbs)
Used Spring (at each finger) - Min.	1.6 kg (3.5 lbs)

BRUSH HOLDER CLEARANCE

Bottom Of Brush Holder To Commutator	
Min.	3 mm (1/8″)
Max.	5 mm (3/16″)

COMMUTATOR

Mica Groove Width	
D37, D47, D57, D67	0.84 mm (.033″)
D75, D77, D87	1.27 mm (.050″)
Mica Groove Depth	
Min.	1.2 mm (3/64″)
Max.	2 mm (5/65″)

PINION APPLICATION

	Pinion Advance	Approximate Temperature Rise Above Shaft Temperature
15 to 18 teeth	1.40 mm ± 0.13 mm (.055″ ± .005″)	121° C (218° F)
19 to 21 teeth	1.27 mm ± 0.13 mm (.050″ ± .005″)	110° C (198° F)
22 to 25 teeth	1.14 mm ± 0.13 mm (.045″ ± .005″)	99° C (178° F)
D87 motor pinions	2.16 mm ± 0.13 mm (.085″ ± .005″)	189° C (340° F)

GEAR CASE

Support arm wear limit	*100.8 mm (3-31/32″)*
Lubricant	See M.I. 1756
Initial charge of lubricant	
56 tooth gears	8 kg (18 lbs)
57 thru 60 tooth gears	7 kg (16 lbs)
61 and 62 tooth gears	6 kg (14 lbs)

SUPPORT BEARINGS

Lubricant	As specified in M.I. 1756
Lubricant level	
Wide window	
Min.	64 mm (2-1/2″)
Max.	127 mm (5″)
Narrow window	
Min.	64 mm (2-1/2″)
Max.	165 mm (6-1/2″)
Narrow window with overflow	
Min.	64 mm (2-1/2″)
Max.	140 mm (5-1/2″)
Wear limits	See Fig. 25

SERVICE DATA (Cont'd)

Replacement Support Bearings, Dual Seal, Narrow Window

203 mm (8") Axle	Bearing Part Number	Seal Part Number
Standard Bore	9526107	9323317
0.8 mm (1/32") Undersize Bore	9526108	9323317
1.6 mm (1/16") Undersize Bore	9526109	9323317
2.4 mm (3/32") Undersize Bore	9526110	9329249
3.2 mm (1/8") Undersize bore	9526111	9329249
0.8 mm (1/32") Oversize Flange	9526112	9323317
1.6 mm (1/16") Oversize Flange	9526113	9323317

210 mm (8-1/4") Axle	Bearing Part Number	Seal Part Number
Standard Bore	9526099	9329250
0.8 mm (1/32") Undersize Bore	9526100	9329250
1.6 mm (1/16") Undersize Bore	9526101	9329250
2.4 mm (3/32") Undersize Bore	9526102	9329248
3.2 mm (1/8") Undersize Bore	9526103	9329248
0.8 mm (1/32") Oversize Flange	9526104	9329250
1.6 mm (1/16") Oversize Flange	9526105	9329250

WEIGHTS (Approximate)

Model D87

Complete motor	2 912 kg (6420 lbs)
Armature	872 kg (1923 lbs)
Gear case	68 kg (150 lbs)

Other Models

Complete motor	2 790 kg (6150 lbs)
Armature	821 kg (1810 lbs)
Gear case	68 kg (150 lbs)

SPECIAL TOOLS

Pyrometer, Hand type	8027937
Heater, Induction type pinion	8041446
Die, Armature shaft rethreading	8050721
Protector, Pinion	8054871
Spacer	8116073
Handle, Sliding "T"	8127528
Wrench, Pinion Nut	8127529
Lifter, Brush springs	8140869
Depth Gauge, Pinion advance	8160273
File, Commutator Slot	8238905
Thermo-Grip Pliers	8064918
Remover-Installer, Filler Cap	8250241
Aligning Tool, Brush Holder Spring Cell	8305181
Adapter, Commutator Grinder (Frame Mounted)	8354226
Adapter, Commutator Grinder (Brush Holder Mounted)	8354239
Commutator Grinder	8355891
Grinder Alignment Bar	8210141
Vacuum Cleaner Blower	8210140
Dust Collector	8210142

Grinding Stones, Finish Grade – 2 reqd.	8201791
Grinding Stones, Medium Grade – 2 reqd.	8496921
Brush Seater Stone (Chalk Stone)	8204957
Aluminum Oxide Paper, 220 Grit – 216 mm x 46 m (8-1/2″ x 50 yd.) roll, 3 m (10 ft) per motor	19AB12
Hydraulic Pinion Puller Kit	8309742
Hydraulic Pump	8302969
Hydraulic Oil, 3.8 litres (1 gal)	8246430
Hose Assembly	8327054
Nipple, 1/2″-20	8309741
Adapter Nipple (Models D47B2 and D47B3 only), 3/8″-24	8302965
Retaining Nut (Models D47B2 and D47B3 only)	8303020
Manual Pinion Puller Kit (Models D37 and D47 only)	8303330
Pulling Plate Assembly	8168577
Pulling Plate	8168604
Includes Studs:	
5/8″-11 NC (C.E. bearing cap)	8168606
3/8″-16 NC (P.E. outer oil ring)	8168611
5/8″-11 UNC-2A (P.E. bearing cap)	8204436
Wick Lubricator Cleaning Machine	9502464

MATERIAL LIST

Armature Bearing Lubricant

Sealed Application – Shell Cyprina RA Grade 3	
15.9 kg (35 lb Pail)	8249819
54.4 kg (120 lb Drum)	8249820
Brush Holder Spindle Hole Plug	8166383
Liquid Cleaner (pinion application), 19 litre (5 gal) Can	8365668
Grounding Cable	8351902
Caulking Compound, 0.7 kg (1-1/2 lb) Can	8198204
Enamel, Red Air Drying	
1 litre (1 qt)	8061130
19 litre (5 gal)	8048876
Varnish, Black Air Drying	
1 litre (1 qt)	8061114
4 litre (1 gal)	8122347
208 litre (55 gal)	8116521
Flux, Solder, 0.5 kg (1 lb)	8122570
Mineral Spirits	8492097
Neoprene, Liquid, 4 litre (1 gal)	8213281
RTV, Silicone Compound 340 g (12 oz.) Cartridge	8366747
Solder, Tin Base, No. 8 Wire, Approx. 23 kg (50 lb) Spool	8225761
Solder, Pure Tin, 7.3 kg (16 lbs)	8069984
Threadtex, Texaco, 19 litre (5 gal)	8307731
Tubing, Heat Shrinkable, 38 mm dia. x 76 mm lg (1-1/2″ x 3″)	8352037
Primer, Buff, 4 litre (1 gal)	8228726
Solder, High Temperature, 2 mm x 6 mm (3/32″ x 1/4″), 18 to 22 kg (40 to 48 lb) roll	8190185

SERVICE DATA (Cont'd)

SEALED BEARING LUBRICANT QUANTITY ± 7 g (1/4 oz.)

	PINION END		COMMUTATOR END	
D77B Models Manufactured Or Rebuilt After January 1, 1971	Kilograms	Ounces	Kilograms	Ounces
Cover	0.227	8	0.170	6
Cap	0.397	14	0.198	7
Roller Cage O.D.	0.057	2	0.028	1
Roller Cage I.D.	0.057	2	0.028	1
	0.738	26	0.424	15
D77B Models (except above)				
Cover	0.340	12	0.170	6
Cap	0.397	14	0.198	7
Roller Cage O.D.	0.057	2	0.028	1
Roller Cage I.D.	0.057	2	0.028	1
	0.851	30	0.424	15
D77E Models				
Cover	0.397	14	0.170	6
Cap	0.482	17	0.198	7
Roller Cage O.D.	0.057	2	0.028	1
Roller Cage I.D.	0.057	2	0.028	1
	0.993	35	0.424	15
D87 Models				
Cover	0.425	15	0.170	6
Cap	0.567	20	0.198	7
Roller Cage O.D.	0.085	3	0.028	1
Roller Cage I.D.	0.085	3	0.028	1
	1.162	41	0.424	15
D87X, D87Y, D77X3A				
Cover	0.227	8	0.170	6
Cap	0.397	14	0.198	7
Roller Cage O.D.	0.057	2	0.028	1
Roller Cage I.D.	0.057	2	0.028	1
	0.738	26	0.424	15