ELECTRO-MOTIVE

MAINTENANCE INSTRUCTION

M.I. 1144
*Rev. B

AIR COMPRESSOR MODELS WBO AND WBG

This Maintenance Instruction covers the WBO and WBG air compressors used on locomotives shipped since January 1, 1969 and provides instructions for upgrading older versions of these two models. It DOES NOT SUPERSEDE M.I. 1110 Rev. A which covers compressor Models WXO, WXE, WXG, ABO, ADJ, and ADX.

DESCRIPTION

The WBO and WBG model air compressors, Fig. 1, are water cooled, two stage air compressors. Each compressor has its own oil pump and pressure lubricating system. Both models are equipped with a deep sump oil pan in domestic applications. Export units are equipped with a shallow sump oil pan.

The WBO compressor has two low pressure and one high pressure cylinders and the WBG compressor has four low pressure and two high pressure cylinders. The low pressure cylinders are set at an angle to the vertical high pressure cylinder position. The pistons of the high and low pressure cylinders are all driven by a common crankshaft.

Before it enters the compressor the air is cleaned by passage through a dry-type air filter. On single filter units the filter is mounted on the air inlet manifold. On dual filter units the filters are mounted directly onto each of the two low pressure cylinder heads.

Air at atmospheric pressure is drawn in through the filter and intake valve into the low pressure

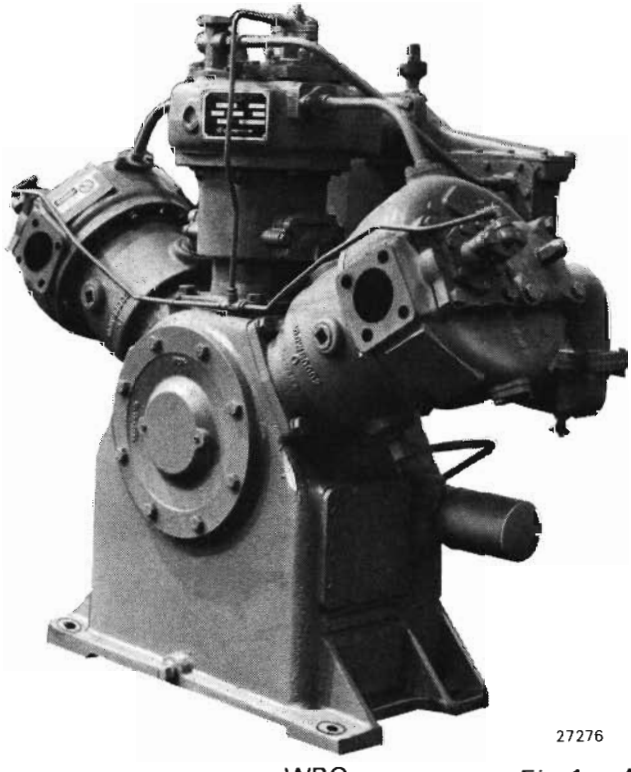

27276

WBO

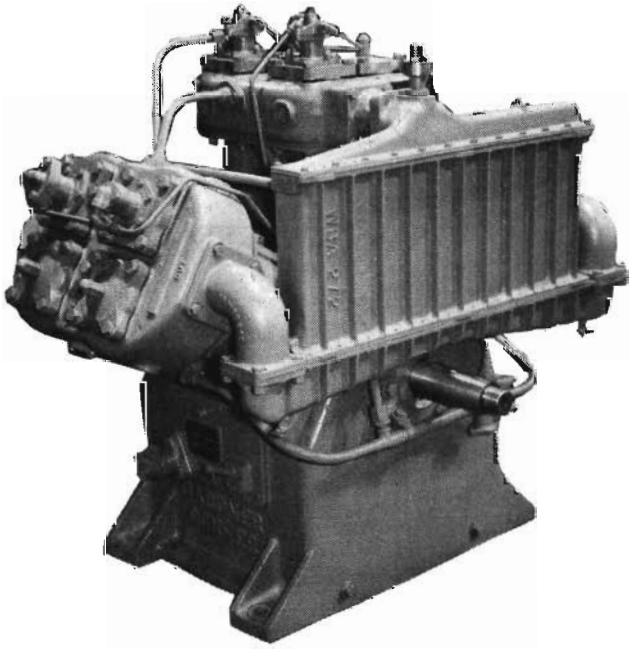

21216

WBG

Fig.1 – Air Compressor

*This bulletin is revised and supersedes previous issues of this number.

cylinders during the downward stroke of the piston. As the air is compressed on the upward stroke, the intake valve is closed and the air at higher pressure is forced through the discharge valve into the intercooler. Air leaves the intercooler, entering the high pressure cylinder through its intake valve. As the high pressure piston moves upward, it compresses the air to a higher pressure, forcing it out through the discharge valve and connecting piping to the main air reservoir.

The intercooler contains passages for engine cooling water and for air from the low pressure cylinders. It acts to remove heat from the compressed air, making it more dense, and thereby improving the efficiency of the high pressure cylinder(s). The basic intercooler has one water inlet and one water outlet, but some intercoolers (two-pass) have one water inlet and two outlets to obtain parallel flows and more efficient cooling of the air. A two-pass intercooler is required for operating speeds of 950 RPM or greater. Air flow is the same through each type of intercooler.

Since the compressor is driven by the engine, it is running whenever the engine is running, although not continuously pumping air.

When main reservoir air reaches the recommended pressure, the compressor governor control admits air to the unloader assembly, cutting out the compressor action by holding the intake valve open. When reservoir pressure falls, the air operating the unloader is cut off, the intake valve is released, and the compressor resumes normal pumping.

CRANKCASE BREATHER

WBO compressors are equipped with a crankcase breather which permits a partial vacuum in the compressor crankcase. To accomplish this, the breather acts as a check valve. When pressure builds up in the crankcase as the pistons move down, the breather valve opens. As the pistons start up, the breather valve closes, preventing the admission of air into the crankcase.

On springbacked valves there should be only a slight tension in the spring. Excess tension will cause abnormal pulsation at the breather as the pistons move up and down, nullifying the purpose of the breather.

The breather, Figs. 2 & 3, is connected to the compressor air intake manifold or to the filter. This prevents the escape of vapors into the air around the compressor.

The breather should be cleaned periodically with petroleum solvent and blown dry with compressed air.

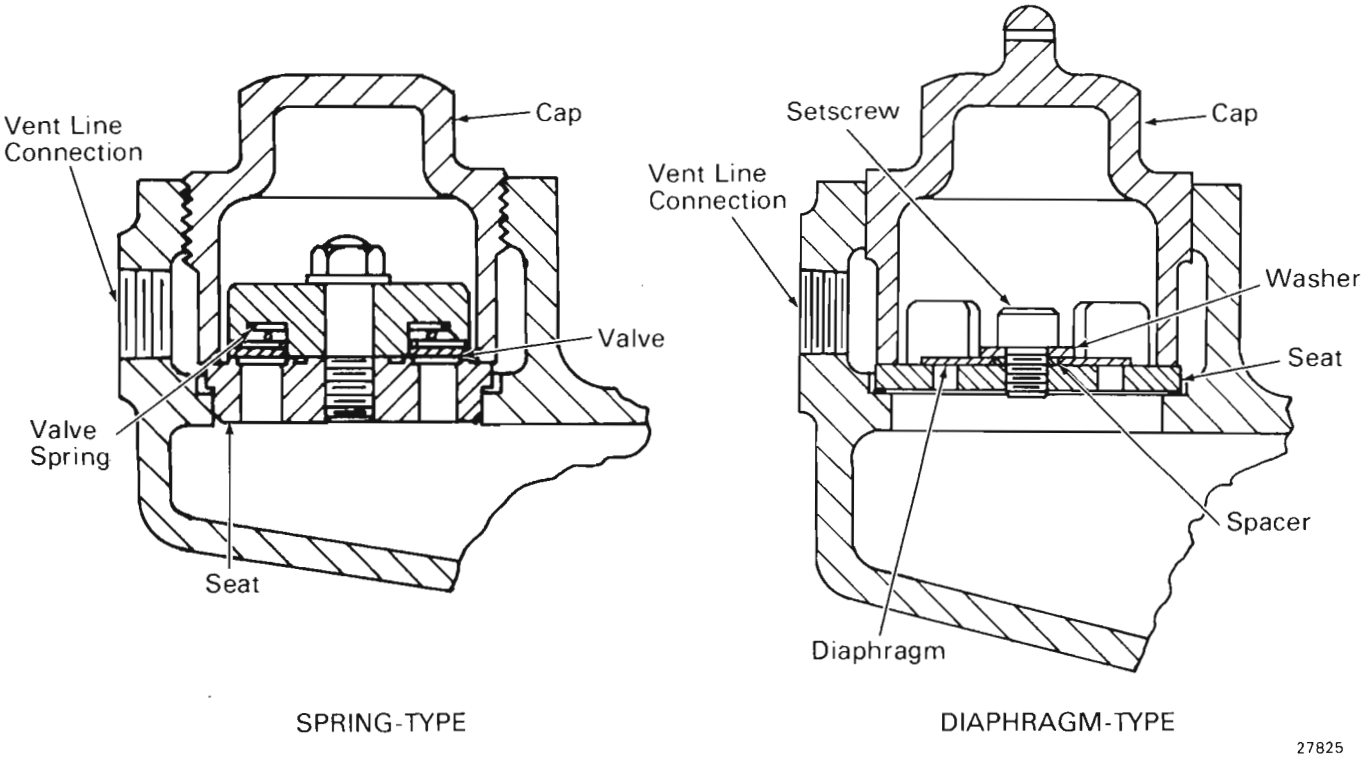

Fig.2 – Crankcase Breathers Applied To Earlier Units

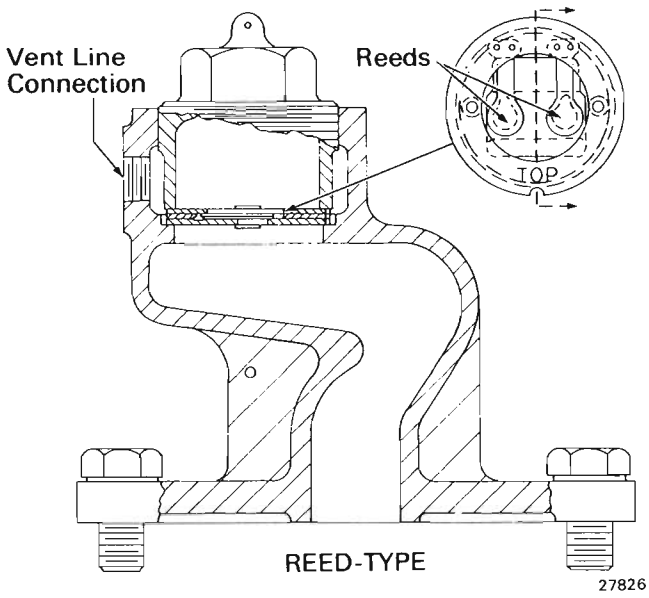

Fig.3 - Basic Crankcase Breather

LUBRICATING SYSTEM

The lubricating system is shown in Fig. 4. The crankshaft is rifle drilled for passage of oil to the connecting rod bearings. Oil under pressure from the lubricating oil pump flows through the drilled passages of the crankshaft. The piston pin bearing and crankshaft main bearings are lubricated either by the oil mist from the connecting rod oil throw-off or by the flow of oil under pressure through rifle drilled connecting rods. The latter system is required for idling speeds of 200 RPM or less. The drilled rod system requires a gear-type oil pump.

A block mounted on the side of the crankcase houses a valve, Fig. 5, that is used to control oil pressure. This valve provides for correct minimum oil pressure at idling speed and ensures adequate oil pressure at all speeds.

CAUTION

Do not put a locomotive into service with a pressure gauge at the test opening. Failure of the gauge can bring about serious compressor and engine damage.

PLUNGER-TYPE OIL PUMP

The plunger- or piston-type oil pump is actuated by a strap riding on an eccentric on the crankshaft. Oil from the pump flows through the drilled pump plunger and eccentric and into the drilled passages of the crankshaft.

GEAR-TYPE OIL PUMP

The oil pump drive shaft is driven by a mating helical gear that is shrunk on the crankshaft. Oil under pressure is fed to the relief valve block and returned by drilled passages in the crankcase to the oil introducing ring that is housed in the small bearing end plate. A drilled opening in the crankshaft lines up with a circumferential groove in the oil introducing ring I.D. to feed oil to the drilled passages in the crankshaft.

The lube oil filter provided with compressors that are equipped with gear-type pumps is a spin-on, full flow design with a built-in relief valve.

Units equipped with plunger-type pumps may be converted to gear-type by the procedure detailed in M.I. 9621.

LUBRICATION REQUIREMENTS

It is important that the compressor crankcase oil be changed at intervals given in the applicable Scheduled Maintenance Program. After draining the oil, clean the inside of the crankcase by flushing with petroleum solvent and wipe clean with lint-free, bound-edge towels. For compressor lubricating oil specifications refer to the applicable Locomotive Service Manual. For crankcase oil capacity, refer to the Service Data pages of this Maintenance Instruction.

Oil level can be determined at any time, with the compressor running or stopped. When the basic float gauge is applied to the compressor, the gauge needle must be kept in the green "RUN" area. When the compressor is equipped with a dipstick-type oil level gauge, oil should be added as indicated by the dipstick reading. To take an oil level reading from a dipstick, first remove it, wipe it clean, and reinsert it, making certain that it is fully seated. Then remove the dipstick and make the reading. A low oil protection sytem is available and is detailed in Maintenance Instruction 9638.

Oil pressure should be checked periodically to ensure that the pump and associated parts are functioning properly. With engine at 315 RPM and oil temperature at 60° C (140° F) oil pressure should be 103 kPa (15 psi) minimum on new compressors and 48 kPa (7 psi) minimum on rebuilt compressors. A plugged pipe opening is provided in the oil relief valve for application of a pressure gauge to check compressor oil pressure.

An improved relief valve with a built-in accumulator has been applied to all compressors since early 1974.

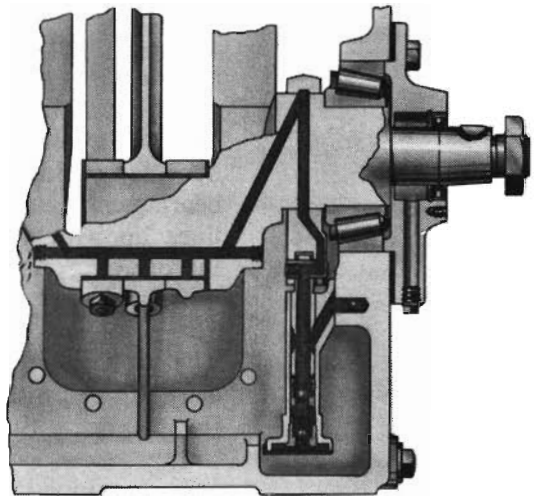

22319

PLUNGER-TYPE OIL PUMP

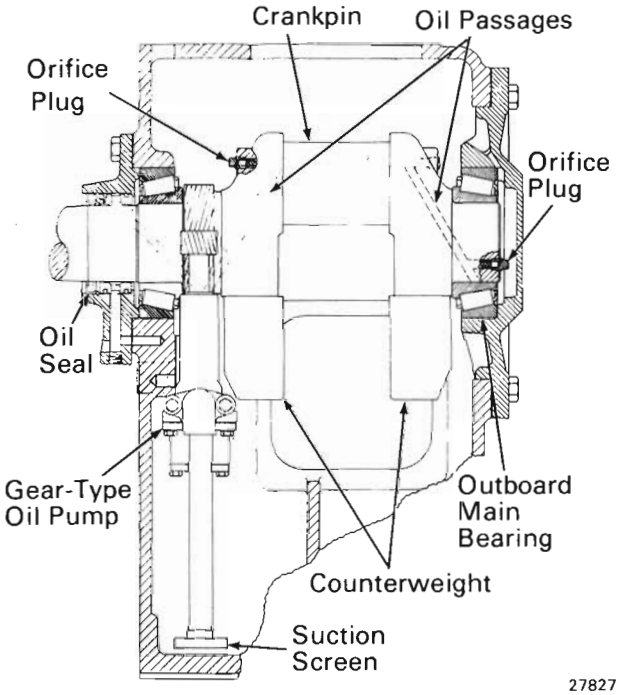

27827

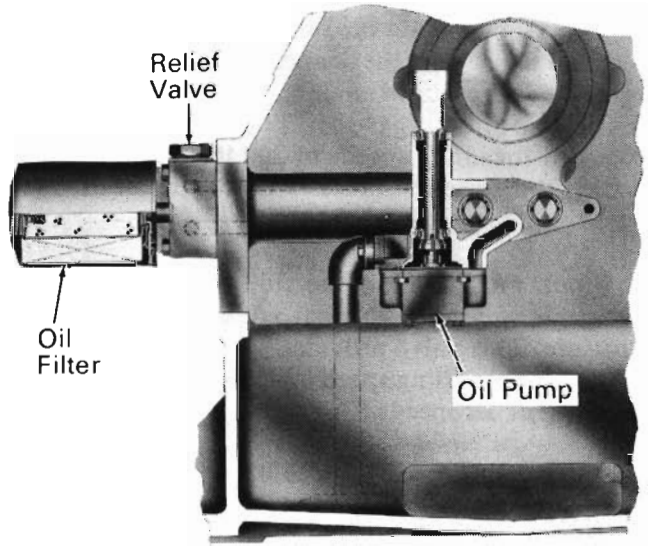

21217

GEAR-TYPE OIL PUMP AND FILTER

Fig.4 – Lubricating System

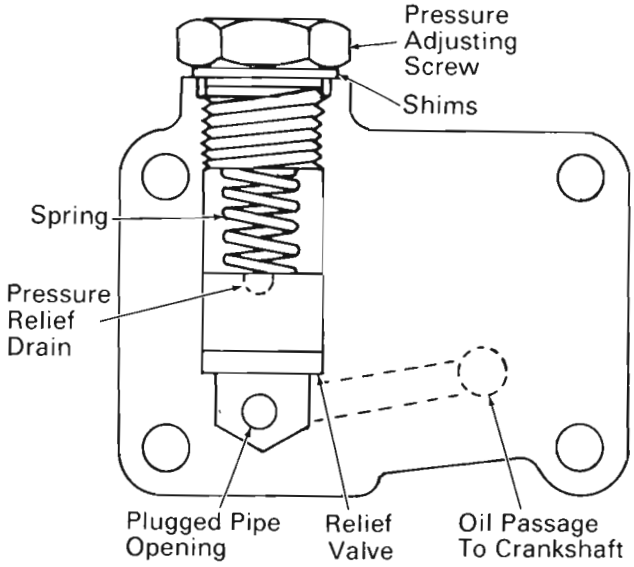

ACCUMULATOR - TYPE
(Plunger Pump Units)

27828

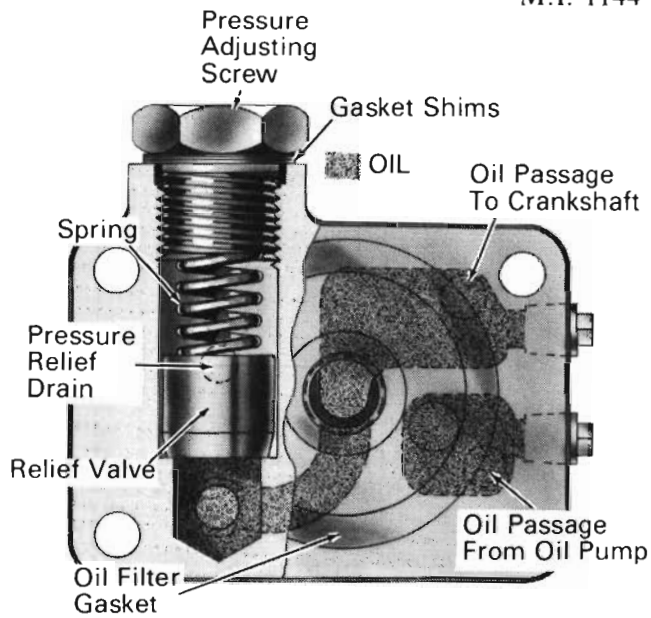

ACCUMULATOR-TYPE
(Gear Pump Units)

21218

Fig.5 – Oil Pressure Relief Valve

This relief valve reduces pressure pulses. It is a direct replacement for all existing relief valve assemblies used with direct feed lubrication systems. No crankcase modifications are required. However, for proper operation, the proper gasket and mounting bolts listed in the applicable Parts Catalog should be used.

Although the valve assembly significantly reduces oil pressure pulses, a pressure gauge with an externally mounted pulsation damper should be used whenever oil pressure is measured. After the pressure is checked, the locomotive should be shut down, the gauge removed, and the pipe opening plugged.

Pressure readings should be taken when oil temperature is 60° C (140° F). In the event that oil temperature is lower, the oil pressure versus temperature graph shown in Fig. 6 can be used to determine the corresponding pressure at 60° C (140° F). The graph is applicable to all relief valve assemblies applied to new or rebuilt compressors or supplied as service parts after October, 1973. The graph should not be used on earlier relief valve assemblies.

Oil pressure is varied by adding or removing shims under the pressure adjusting screw on the relief valve, Fig. 5. The recommended clearance between the valve body and the piston is shown in the Service Data. If the clearance is exceeded, and a new piston will not correct the clearance discrepancy, a new valve must be applied. On accumulator-type valves, alteration of shims is not normally required.

When checking oil pressure on units that are equipped with lube oil filters, use the upper plugged opening on the side of the relief valve body. The oil pressure relief valve is located between the filter and the crankshaft oil passages. Pressure drop across the filter has no effect on the oil pressure setting.

To check oil pressure drop across the filter, take pressure readings at both the upper and lower openings on the side of the oil pressure relief valve body. Subtraction of the lower reading from the upper reading gives the pressure drop across the filter. If the drop is as much as 10 psi, the filter should be replaced even if the replacement schedule does not yet call for it.

CAUTION

The old filter gasket must be removed completely in order to obtain a proper seal with the new gasket.

LUBRICATING OIL QUALIFICATION

Since variations in operating conditions such as ambient temperature and length of time a compressor is loaded can influence the performance of individual compressor oils, a final selection of a particular brand to be used is best made by testing under actual operating conditions. The oil should be tested for at least three months, and preferably six months, to be sure the variables of operation are encountered. A compressor in new condition in respect to cylinders, rings, heads, and bearings should be selected for the test.

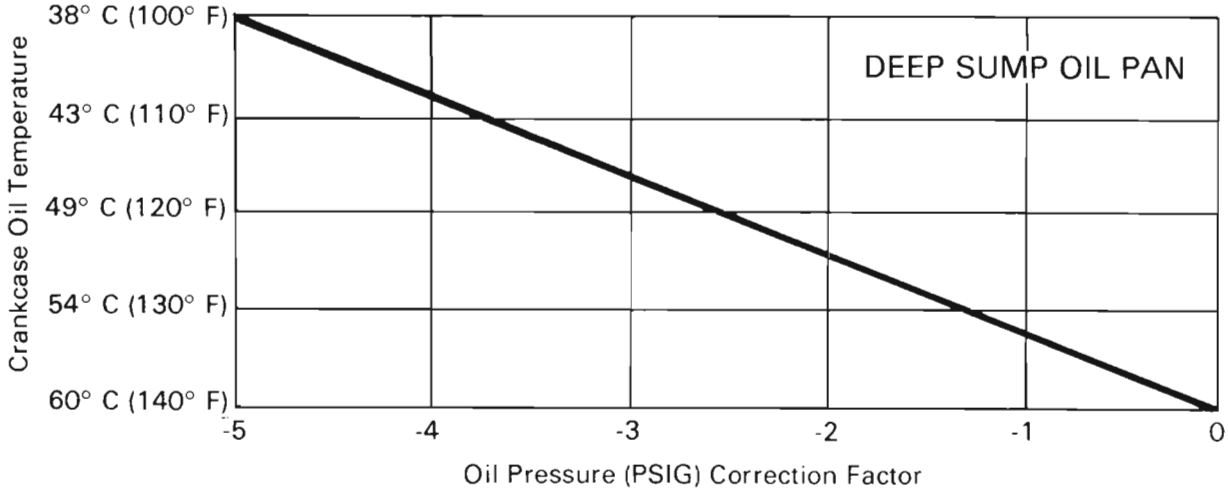

Instructions: When crankcase oil temperature is below 60° C (140° F), subtract graph readings from pressure gauge readings obtained at lower temperatures to determine gauge pressure at 60° C (140° F).

Conditions:
1. 200 to 950 RPM.
2. S.A.E. No. 10 weight lubricating oil.
3. Compressor loaded or unloaded.
4. Relief valve 8493807 or later.

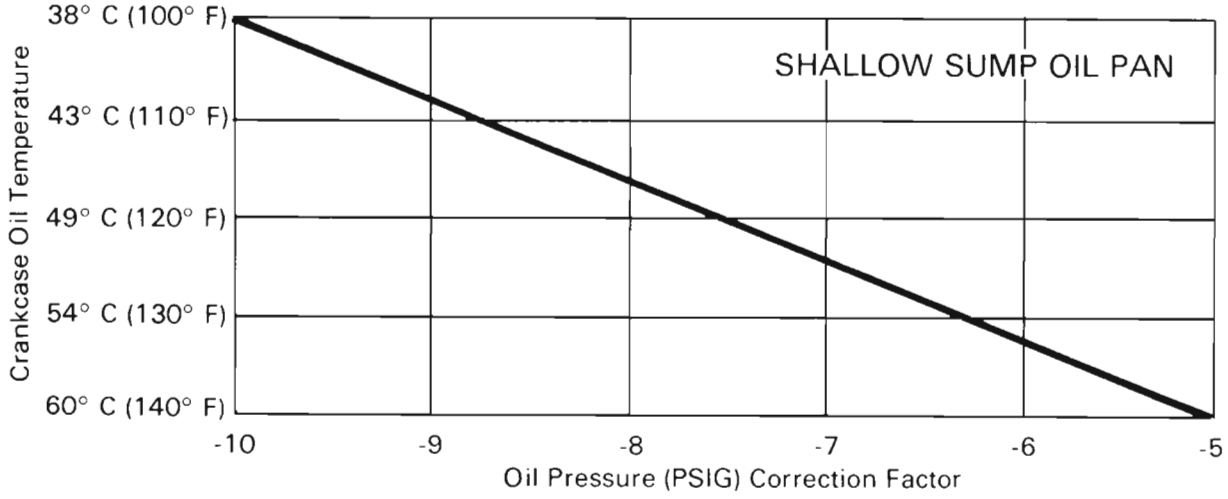

Instructions: When crankcase oil temperature is below 60° C (140° F), subtract graph readings from pressure gauge readings obtained at lower temperatures to determine gauge pressure at 60° C (140° F).

Conditions:
1. 200 to 900 RPM.
2. S.A.E. No. 30 weight lubricating oil.
3. Compressor loaded or unloaded.
4. Relief valve 8493807 or later.

27829

Fig.6 – Correction Factor Graphs - Oil Pressure Versus Oil Temperature

At the end of the test period, the compressor and the air system of the locomotive should be inspected. In the compressor, the piston pin bushings, piston rings, cylinder walls and pistons should be inspected for lacquer deposits. Discharge valves should also be inspected for lacquer and hard or soft carbon deposits. The locomotive air system can be qualified for lacquer accumulation by examination of the magnet valves, brake valves, and feed valves. The presence of any lacquer, hard carbon, or excessive deposits of soft carbon indicates an unsuitable lubricant.

The presence of an oily substance in a feed valve does not necessarily mean an oil pumping air compressor, but may mean an unsuitable oil is being used. There are unstable ends in some oils which will distill off and deposit as an oil formation at expansion areas such as feed valves. Generally speaking, this substance will lacquer a shiny surface rapidly.

Heavy detergent oils will form hard lacquer deposits in the cylinder heads and on the cylinder walls which will result in oil carryover in the system. Heavy weight oils will cause excessive wear in the piston pin bearings. Detergent or high film strength oils would probably improve piston pin bearing life, but cannot be used because ring seating is affected and carryover into the air system has a detrimental effect on air brake equipment.

Extensive experience has demostrated that heavy detergent oils or mineral oils with unstable ends will not satisfactorily lubricate compressors. In several instances of compressor failure, examination of failed parts has shown that failure resulted from the use of unsuitable oils. This has been confirmed by the fact that upon changing to an oil suited to the application, compressor failure has not recurred.

ORIFICE TESTING

The compressor should be given an orifice test, as a measure of its condition, at intervals as outlined in the Department of Transportation rulings.

The graphs shown in Fig. 7 indicate the recommended limits for the compressors covered by this instruction. For part numbers of various size orifices and adapters for these tests, refer to the Service Tools Catalog.

AIR FILTERS

The air inlet filter or filters should be changed at intervals given in the applicable Scheduled Maintenance Program, or more frequently if operating conditions require.

For a detailed explanation of the filters and the correct replacement elements required, see the applicable Locomotive Service Manual.

COMPRESSOR DISASSEMBLY

Before the compressor is disassembled, the exterior of the unit should be thoroughly cleaned and the parts marked to ensure that each will be reapplied to its original location. Care should be taken when handling parts so as not to damage otherwise undamaged parts. When cleaning the parts, do not put main bearings, crankshaft, connecting rods, valves, pistons or piston pins in same basket with other compressor parts.

Cylinder heads, cylinders, crankcases, end plates, handhole covers, suction and discharge elbows, manifolds, and cast iron intercoolers should be placed in a cleaning solution and left there a

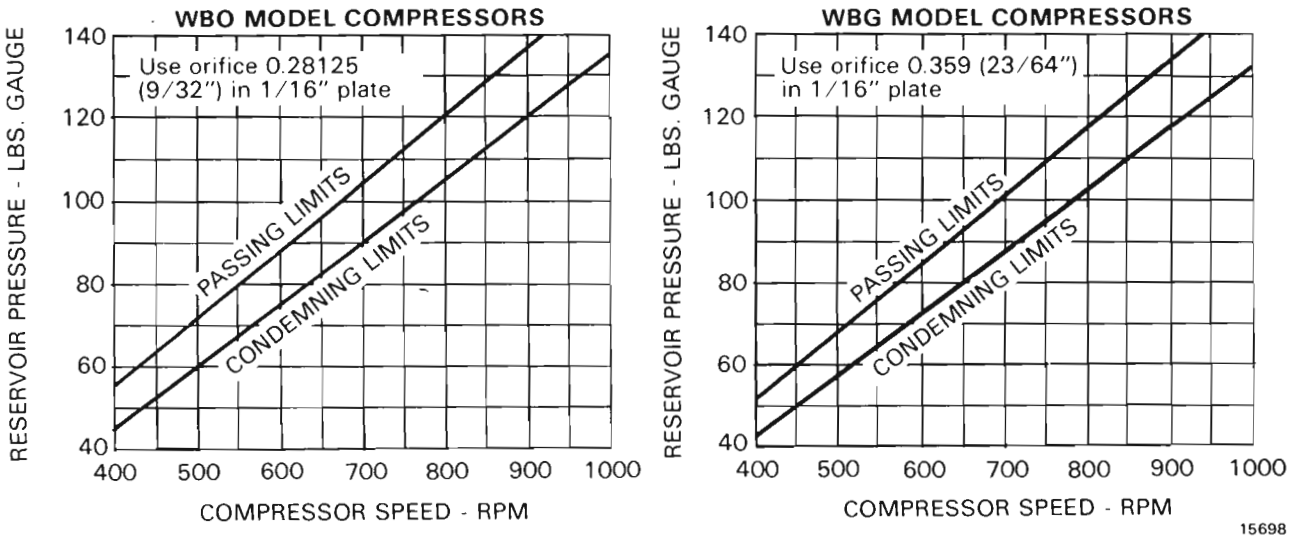

Fig.7 – Compressor Orifice Test Limits

sufficient length of time to ensure proper cleaning. After removal from the cleaning solution, these parts should be wire brushed and magnetic-particle inspected for defects.

The pistons, crankshaft, and connecting rods should be thoroughly cleaned (DO NOT WIRE BRUSH) and magnetic-particle inspected for defects.

After magnetic-particle inspection all parts should be rewashed and demagnetized before reassembly.

1. Remove pipe plug at bottom of crankcase to drain lube oil. Drain compressor cooling water by draining locomotive system.
2. Remove all piping assemblies and both handhole covers.
3. Remove air filter, air intake manifold, crankcase breather, oil pressure relief valve, safety valve, and suction and discharge elbows.
4. Remove intercooler assembly.
5. Remove cylinder heads and cylinder assemblies.
6. Remove connecting rod cap bolts, and pull piston and connecting rod assemblies off of crankshaft.
7. Remove the oil pump and oil pump eccentric (if applicable) from crankcase.
8. Remove end plate bolts and pull end plates off the crankshaft.
9. Remove crankshaft from crankcase.
10. Individual assemblies can now be disassembled by following instructions covering the particular assembly.

INTERCOOLER

CLEANING

It is recommended that the intercoolers be removed at overhaul time, and cleaned inside and out. Oil film inside the intercooler, or an accumulation of dirt, will materially reduce its efficiency, with the possibility of excess moisture being carried into the locomotive air system.

The intercoolers should be cleaned using an inhibited alkaline or solvent cleaner and water. After cleaning, flush thoroughly with hot water, and blow dry.

SAFETY VALVE TEST AND ADJUSTMENT

A safety valve, Fig. 8, is provided to relieve excessive pressure buildup in the intercooler. This valve must be tested and properly adjusted.

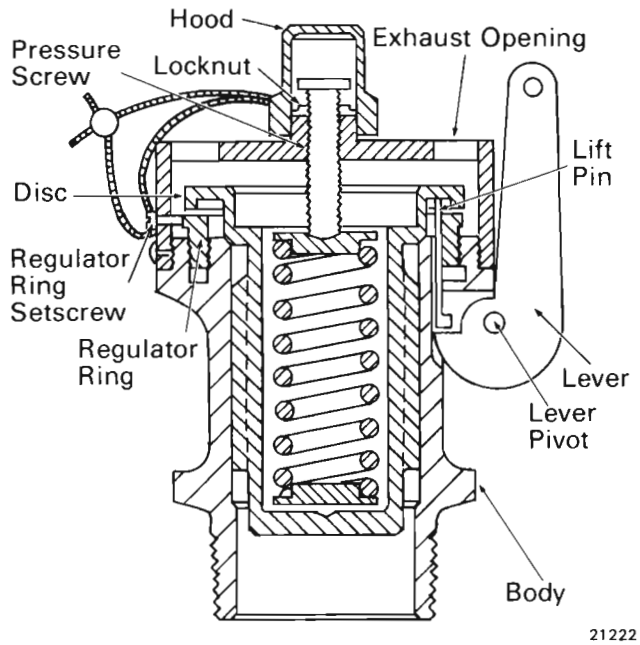

Fig.8 – Intercooler Safety Valve

Test Procedure

In testing safety valves, it is essential that the air supply be adequate (at least 330 liter [20,000 cu in.] reservoir) with piping to the valve not less than the size of the pipe thread fitting on the end of the valve. If restricted feed is used, the restrictions must not be less than 11 mm (7/16") in diameter. If air supply is not adequate, the valve cannot be set properly.

The valves must not lift before the specified lift pressure, and the blowdown of the valve must not exceed 69 kPa (10 psi). The valve must be fully assembled when the test is made.

The valves should lift at a static air pressure between 441 and 455 kPa (64 and 66 psi).

Adjustment

A valve which does not lift or reseat within the specified pressure ranges should be disassembled and thoroughly cleaned with a solvent or caustic cleaner. (DO NOT USE A WIRE BRUSH.) Replace any damaged parts.

Reassemble the valve with a small amount of light oil between the valve disc and the valve body. Apply a mixture of light oil and graphite on the lever pivot and lift pin.

Adjust the lift and reseating pressures of the valve to those given under Test Procedure. Adjust the lift pressure by adjusting the pressure screw to change spring tension on the disc. Adjust the reseating pressure by loosening the regulator ring setscrew and adjusting the regulator ring. After the adjustments have been made, the setscrew and the hood should be lockwired and sealed.

UNLOADER VALVES

The piston-type unloader valves, similar to Fig. 9, are used on the compressor to hold the intake or suction valves off their seats to stop compressor pumping when the main reservoir air is at the proper pressure.

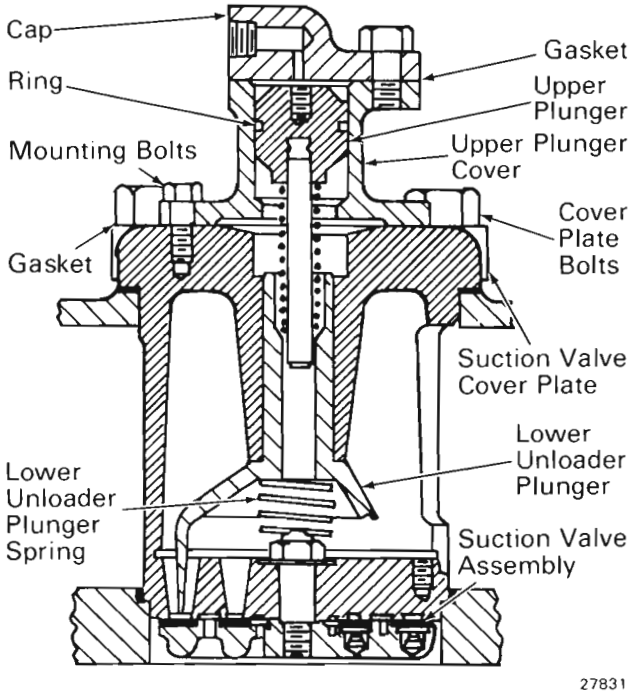

Fig.9 – Piston-Type Compressor Unloader Valve

Disassemble and service the valves as follows:

1. Remove the unloader valve assembly and cap from the suction valve cover plate. Then remove the cap and gasket from the upper plunger cover.

2. Remove the plunger assembly from the upper plunger cover.

3. Clean the plunger and ring. Check that the ring operates freely in its groove.

4. Clean and inspect the interior of the upper plunger cover.

5. Apply a small amount of fine lapping compound to the angle seat on the plunger. Insert the plunger in the cover and lap the angle seats of the plunger and cover.

6. After lapping the seats, remove the plunger and clean both the plunger and cover. Remove all compound.

7. Apply light grease comparable to petroleum jelly to the cover, plunger, and ring. Reassemble the parts, using new gaskets under the cover cap and the upper plunger cover.

DISCHARGE AND SUCTION VALVES

Each cylinder has one discharge valve, Fig. 10, and one suction valve, Fig. 11. Each valve is a cage-like assembly consisting of a bumper, a seat, springs, and two concentric discs. The dics are installed between the bumper and seat and are held against the seat by springs that fit into recesses in the bumper. The assembly is held together by a single centrally located bolt.

In a discharge valve assembly the springs are above the discs and hold them down against the seat. In a suction valve assembly the springs are below the discs and hold them up against the seat. Discharge valves on compressors made prior to May 1, 1975, and all suction valves, contain six springs, three for each disc. Discharge valves on compressors shipped since May 1, 1975 have nine-spring valves, three on the inner disc, and six on the outer disc. The springs for the nine-spring valves are a helical design with buttons on the ends that ride against the discs.

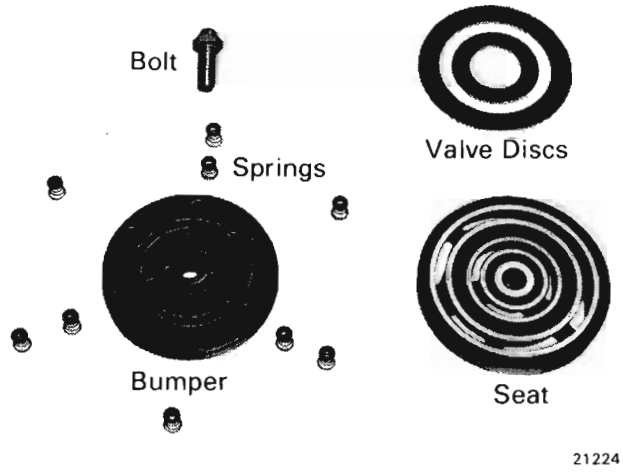

Fig.10 – Discharge Valve Assembly

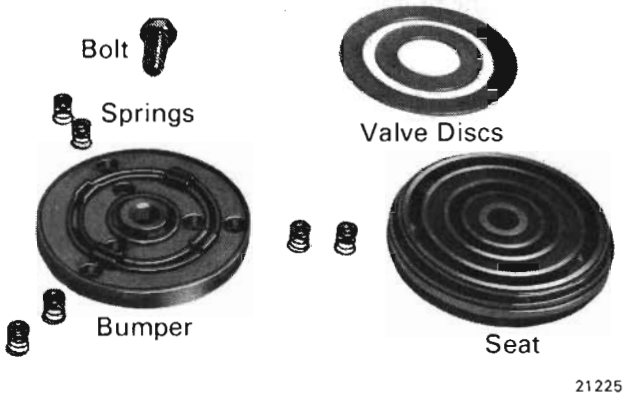

Fig.11 - Suction Valve Assembly

Special valve holders that facilitate air compressor valve maintenance are available. These valve holders ensure proper rigidity and minimize the posibility of damage while work is being done on the valves. For holder part numbers see Service Data at the back of this instruction.

REMOVING DISCHARGE VALVES

1. Back off the crown and setscrew, Fig. 12, at the center of the cover plate.
2. Remove the cover plate bolts and remove the cover plate.
3. Remove the valve clamp.
4. Remove the discharge valve assembly.
5. To prevent entry of foreign material, cover the valve openings.

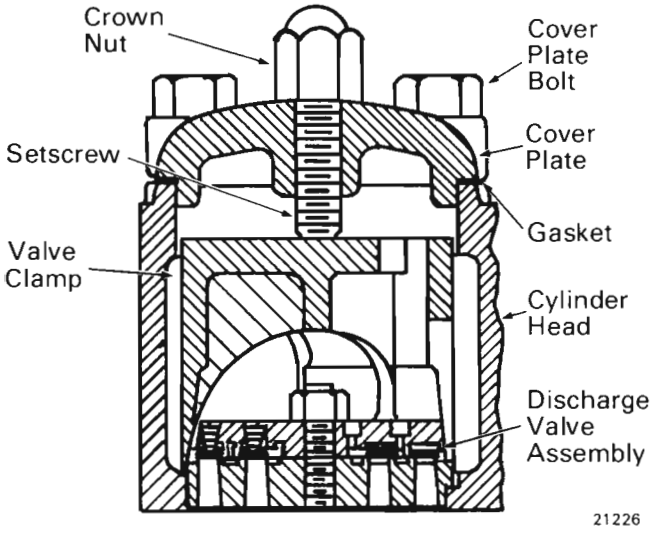

Fig.12 - Discharge Valve Removal

REMOVING SUCTION VALVES

LOW PRESSURE

1. Remove the cover plate bolts, Fig. 9.
2. Remove the unloader and cover plate as an assembly.
3. Remove the suction valve assembly, then cover the valve opening.

HIGH PRESSURE

1. Loosen the crown nuts, Fig. 13, approximately two turns.
2. Remove the cover plate bolts, and remove the cover plate and unloader as an assembly.
3. Make certain that the clamp setscrews have been loosened sufficiently to provide clearance between the screws and the valve clamp upon reassembly.
4. Remove the clamp.
5. Remove the suction valve assembly, then cover the valve opening.

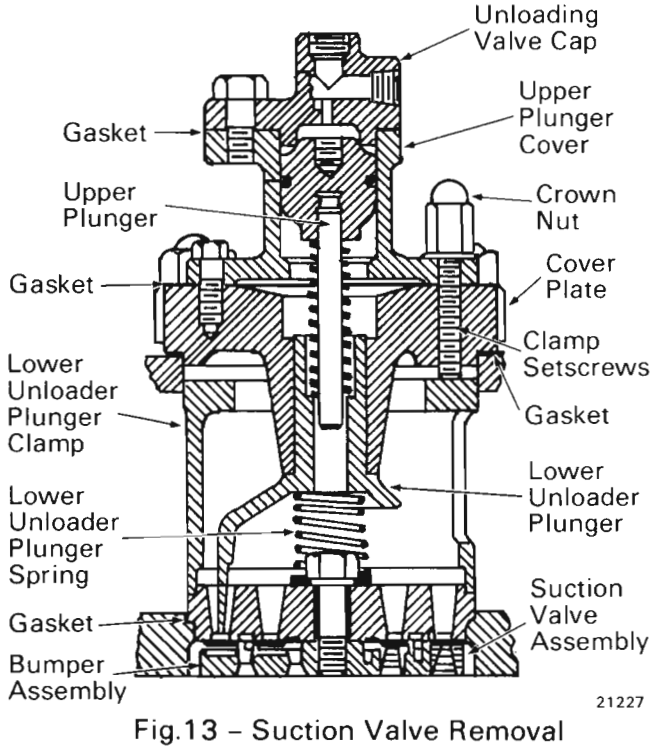

Fig.13 - Suction Valve Removal

SUCTION AND DISCHARGE VALVE DISASSEMBLY

Valves can be taken apart to remove the springs and valve discs by removing the nut and lockwasher or the cap bolt. The valve parts should then be cleaned thoroughly.

VALVE RECONDITIONING

Valve Discs

The valve discs should be replaced if a wear step has formed. The following information is provided to qualify a disc for reuse.

A valve disc that shows no defects requires only cleaning and should not be lapped or ground.

If a disc must be lapped to remove some minor defects, even pressure should be placed on the disc. The valve disc should not be pressed with the fingers, as the pressure will be applied only on small areas. A disc can be sprung enough with finger pressure to cause a wavy finish that will allow the valve to leak.

The disc should be placed in a holder that will distribute the pressure evenly while lapping. A simple holder can be made from a flat steel plate cut out to a depth of about 2/3 the thickness of a disc.

The disc should not be lapped to its seat. If the disc is not perfectly flat, the seat will be given a wavy surface. The disc should be lapped on a perfectly flat lapping plate. The lapping compound should be very fine so as to put an almost mirror finish on the disc.

Occasionally, a valve disc which has had a long period of service will stop rotating. If the disc remains in one position long enough, the valve springs will wear rings in the disc. Discs in this condition should be discarded. The wear rings, if deep enough, are weak spots that can develop into cracks. Also, a valve disc which has had considerable service may have a wear step in it. A disc in this condition should be discarded. Minimum valve disc thickness should not be less than that stated in the Service Data.

Valve Seats

Valve seats must be completely free of any nicks, and the edges should be square and sharp. If a valve seat requires lapping. It should be lapped to a master plate using a fine compound that will give a shiny, scratch free surface.

While inspecting valve seats refer to dimensions in the Service Data.

Valve Bumper

Inspect valve bumper for cracks or excessively worn areas. See the Service Data for dimensions.

Valve Springs

New valve springs should be used when reconditioning valves. The springs should have a slip fit in the bumper holes. A spring that fits loosely in the bumper hole will wear rapidly on the bottom coil, promoting spring and disc breakage. If the spring is not set squarely in the bottom of the hole, it will bind and cause wear on the O.D. of the upper coils. This can be avoided by using a rod that is slightly smaller than the 11 mm (7/16") diameter of the spring hole, and square on the end for compressing the spring solid on the bottom. Springs that are too tight will also bind in the holes and cause wear on the upper coils. Springs should be compressed after installation to check for freedom of movement.

Cleaning

After reconditioning and inspection, all valve parts should be thoroughly cleaned for reassembly.

VALVE REASSEMBLY

Discharge Valve

Any discharge valves held in place with stud and nut should have the stud replaced with a cap bolt. This will eliminate removing the stud each time a valve is lapped.

1. Hold bumper assembly in one hand with spring pockets facing up.
2. Place springs in place, with large diameter inserted into spring pocket, and place inner and outer valve discs on their respective springs.
3. Invert the seat assembly and position it on the discs.
4. Hold this assembly together, apply the cap bolt, and tighten to 115 - 129 N·m (85-95 ft-lbs) torque.

Suction Valve

1. Hold the bumper assembly, spring pockets up, and place the inner and outer valve disc springs in their pockets.

2. Place the respective discs on their springs.
3. Carefully place the seat assembly over the discs.
4. Apply the cap bolt and tighten to 115 - 129 N·m (85-95 ft-lbs) torque.

Using a blunt-nosed piece of wood inserted through the valve opening, check that the valve dics are free to move. Check for leaks by filling valve pockets with fuel oil.

If valve assemblies are not to be used immediately, they should be oiled and wrapped to keep them clean. If the valves are to be stored, they should be protected against rust.

CRANKSHAFT

CLEANING

If the crankshaft is removed for any reason, it should be given a thorough cleaning with solvent, particularly during any overhaul work, since metallic particles may lodge in the oil passages. All rifle drillings must be cleaned thoroughly.

The main drilling of the crankshaft consists of two intersecting passages. One of these passages is parallel to the crankpin and is plugged at both ends. These plugs are provided to aid in cleaning and must be removed. A long-handled bristle brush having slightly over a 8 mm (5/16") diameter is recommended for cleaning passages. During scrubbing, solvent should be directed into the passages under approximately 170 kPa (25 psi) pressure. Washing and brushing must be repeated until the oil passages and crankshaft are absolutely clean. After cleaning, be sure to replace the passage plugs which were removed.

In compressors with single ended crankshafts the plug in the oil passage at the stub of the crankshaft is orificed for feeding oil to the main bearing. In units with double ended crankshafts oil is fed to the main bearing by an orifice plug in the nearby end of the crankpin oil passage. Units equipped with gear-type pumps may have, in addition, an orifice plug in the crankpin oil passage end near the pump drive and driven gears. Make sure that the orifices in the plugs are absolutely clean. When installing, check the orifices for proper position, Fig. 14. Take care when tightening that the wrench does not pinch the orifice shut. Check after tightening by running a wire throught the orifice or feeding a solvent under pressure into the crankshaft lube oil inlet opening.

INSPECTION

The main bearing surfaces of the crankshaft should not receive any wear and should not be less than 85.75 mm (3.376") diameter.

On units equipped with a plunger-type oil pump, the oil pump eccentric surface should not be scored, tapered, or out-of-round in excess of 0.013 mm (.0005"). The runout of the crankshaft should not exceed 0.25 mm (.010") at the main bearing journal, with the crankshaft located in centers.

The crankpin on the crankshaft should not be more than 0.038 mm (.0015") out-of-round, or worn to less than 88.80 mm (3.496") diameter. If it is damaged, or worn beyond above limits, it can be reconditioned by grinding, provided the surface will clean up to 0.76 mm (.030") undersize.

If the crankshaft has grooved seal surfaces, use synthetic oil seal kit 8367712 at the oil pump end and kit 8367711 at the opposite end. These kits include a

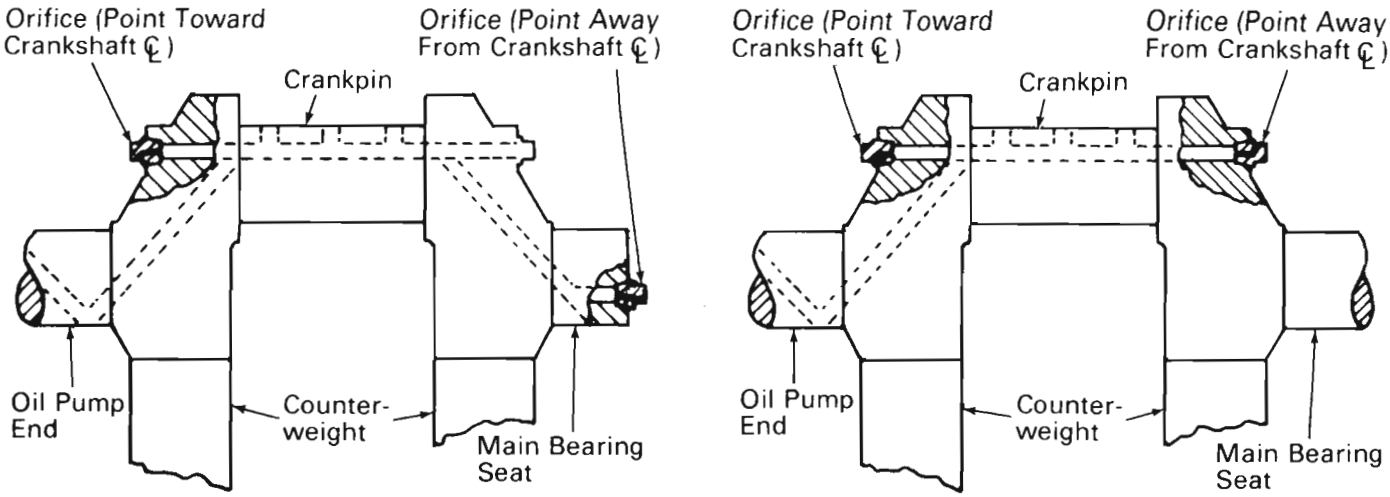

Fig.14 – Orifice Plug Applications

27832

renewable wear sleeve which is to be pressed over the crankshaft to provide an optimum seal riding surface on the crankshaft. Also included is a synthetic oil seal to operate with the 3 mm (1/8″) oversize shaft, provided by the wear sleeve.

1. To apply wear sleeve, the shaft must be clean and seating surface must measure 82.55 ± 0.038 mm (3.250″ ± .0015″).

2. Shaft surface must be coated with a liquid sealant or gasket cement.

3. Wear sleeve must be pressed into correct position with arbor or flat plate against sleeve end. Do not hammer on thin edge of sleeve or wear sleeve may become warped or out-of-round.

4. Remove excess sealant. None should be left on finished working surface.

5. Fill the cavity between the two seal lips with a good quality grease.

6. Install the seal with the name and number side or the lip side facing the outside of the compressor.

All used crankshafts will have some damage in the seal area and it will be advantageous to use the kit, as no crankshaft rework will be necessary in the seal area.

CONNECTING RODS

Connecting rods used in the compressors are equipped with precision bearing inserts. The bearing inserts should be replaced at the time of overhaul or any time their condition warrants replacement.

The connecting rods and bearing shells should be fitted to the crankshaft before the crankshaft is installed in the crankcase. Clearance limits are given in the Maintenance Data at the end of this publication. The connecting rod bearing-to-crankshaft journal clearance can be checked by the use of Plastigage strips.

CAUTION

Connecting rod insert bearing 8083586 must not be used in compressors that have gear-type lube oil pumps; that is, units that have crankshaft with a radius between the crankpin and web. Narrower bearing 8496981 must be used in gear pump equipped compressors in order to clear the radii that are at the crankpin shoulders.

Rifle drilled connecting rods must be used on units which idle at 200 RPM or lower. All rifle drillings must be cleaned thoroughly. A long-handled bristle brush having slightly over an 8 mm (5/16″) diameter is recommended for cleaning passages. During scrubbing, solvent should be directed into the passages under approximately 170 kPa (25 psi) pressure.

CYLINDERS

CLEANING AND INSPECTION

The cylinder should be thoroughly cleaned after removal, prior to any inspection or reconditioning. Examine the cylinder for score marks or ridges at the end of the ring travel surface. Inspect cylinders for a maximum out-of-round condition of 0.03 mm (.001″). Also check cylinder diameter to ensure correct clearances with the correct size piston.

Accumulated cylinder and piston wear will increase piston to cylinder clearance, a limiting factor at the time of reapplication. No cylinder should be matched with a new or used piston with a piston-to-cylinder clearance exceeding the limit given in the Service Data at the rear of this publication.

For example, with a WBO low pressure cylinder worn to a maximum diameter of 200.139 mm (7.8795″), a piston not less than 199.923 mm (7.8710″) diameter must be used. Obviously, with a cylinder worn to this diameter the minimum diameter shown in the specifications for a rebuild piston cannot be used since the maximum clearance of 0.216 mm (.0085″) would be exceeded. If cylinders are worn excessively, they should be rebored to oversize increments of 0.25 mm (.010″). It has been found to be more economical to rebore them to 0.25 mm (.010″), 0.51 mm (.020″), or 0.76 mm (.030″) oversize.

If cylinders are worn to the extent that they would require more than 0.76 mm (.030″) reboring, it is far more satisfactory and economical to replace them with new cylinders or those rebored to the regular oversizes.

REBORING

When reboring is necessary the cylinders should not be rebored to their final size. They should be rebored to 0.05 to 0.08 mm (.002″ to .003″) under their final size to allow enough stock for proper honing. If less stock is left, the boring marks will not be completely removed when the cylinder is honed to size.

HONING

After reboring, the cylinders should be honed for the final finish. A honed finish of 0.64 to 1.01 microns (25-40 microinches) is desired, with a crosshatch of 25° to 35°. The proper microinch finish can be obtained from stones ranging from 180 to 280 grit. See the equipment list at the rear of this publication for the proper cylinder bore honing set.

Fig. 15 shows a cylinder wall at various stages of the cylinder reconditioning operation. Figs. 15a and 15b are views of a cylinder after boring and before honing. Notice the rough finish left by the boring tool. New piston rings installed in a cylinder with this finish would be ineffective. Oil consumption and blow-by would remain high because the rings could not form a good seal. Fig. 15c is the same cylinder after 25 strokes with a spring loaded hone. Although honing marks are visible, the boring marks can also be seen. This finish is still too rough for piston ring seating. Fig. 15d is the cylinder wall after the cylinder was honed to size with a rigid hone. The boring marks have been cleaned up and the cross hatch pattern left by the hone is all that is visible. This surface is ideal for early piston ring seating.

The tolerance allowed on finishing oversize rebored cylinders is +0.03-0.00 mm (+.001"-.000"). This tolerance is added to the amount that the cylinder is rebored. For example, if a standard 177.80 mm (7.000") cylinder is rebored 0.25 mm (.010") oversize, the finished diameter after honing should be 178.05 -178.08 mm (7.010"-7.011").

Honing of cylinders at regular maintenance periods should be avoided, except when used to remove scoring. A better practice is to remove any ridge at the top of the ring travel by scraping, and then rough the cylinder by hand using a No. 180 emergy cloth to produce a crosshatch pattern at an angle of 25°-35° to the bore.

CLEANING AFTER HONING

Of all the operations in repairing an air compressor, cleaning the cylinders may be the most costly one to forget. If the cylinders are not properly cleaned after they are honed, the compressor will wear out in an alarmingly short time. The tiny particles left by the hone will attack the rings, cylinders and any other moving parts in the compressor. Thus, the omission of one procedure can eliminate all the good done by hours of labor and valuable replacement parts. To make certain that the overhaul will last, the following cleaning procedure must be used:

1. Wash cylinder with soap and hot water using stiff fiber brush to clean cylinder bore and flanges.

2. Swab each cylinder thoroughly with a clean rag dipped in 10W engine oil.

3. Wipe out cylinder with dry clean cloth.

4. Repeat Steps 2 and 3 until clean white cloth can be rubbed on cylinder wall with no stain appearing on the cloth. It is important to use oil for this cleaning procedure because the oil pulls the abrasive particles out of the tiny pores and crevices in the cylinder wall. Solvents will not remove all abrasive particles.

PISTONS

At the time of the compressor overhaul, the pistons should be removed, cleaned and inspected for excess wear. Match the pistons with a new or used cylinder so the diameters result in a piston to cylinder clearance which does not exceed the limit given in the Service Data at the rear of this publication.

Piston ring grooves must be square and free from wear ridges. Clearance between the ring side and groove should not exceed 0.01 mm (.004"), where applicable. Minor scuff marks or scratches can be smoothed or rounded with a file. (Do not use a stone or emery cloth.) All pistons that are to be used again should be given a phosphate treatment as outlined in Maintenance Instruction 1758.

PISTON PIN BEARING REPLACEMENT

Current model compressors are equipped with a prefinished bushing in the low pressure piston assembly and roller bearings, Fig. 16, in the high pressure piston assembly. The roller bearing-type piston assembly requires a different piston pin and connecting rod than piston assemblies using other types of bushings or bearings.

Low Pressure Piston

When reconditioning machines, replace the low pressure piston pin bushings with the type removed.

The old bushings or bearings should be pressed out using driving tool 8231757, Fig. 17. Alternate methods tend to gouge the inside of piston bosses and destroy the piston for further use.

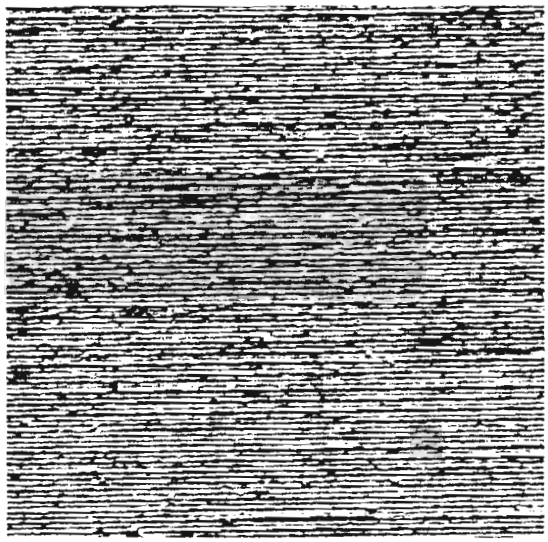

(a) Highly magnified view of bored cylinder reveals rough finish.

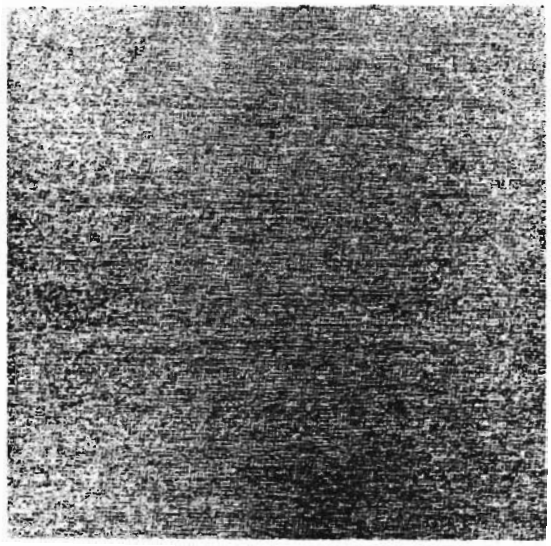

(b) Close-up view of cylinder surface after boring.

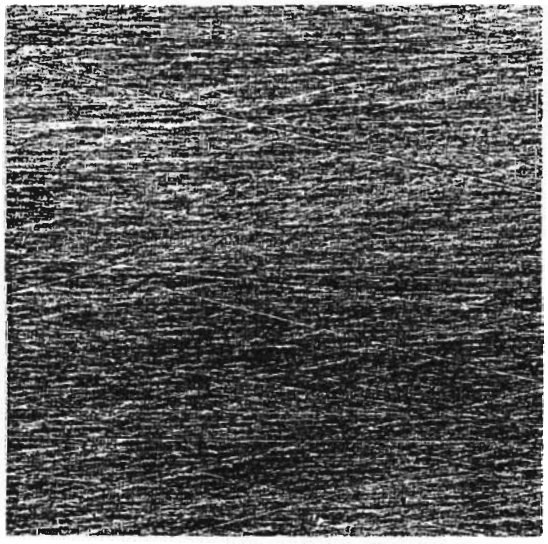

(c) Cylinder wall after 25 strokes with flexible hone. Note boring marks.

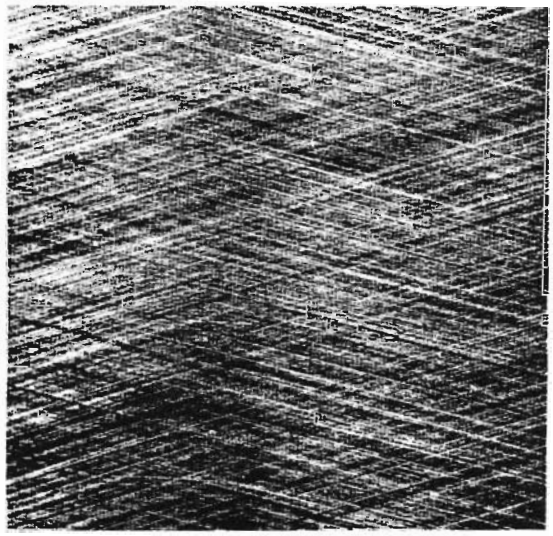

(d) Proper honing leaves crosshatch pattern.

12520

Fig.15 – Cylinder Wall Honing

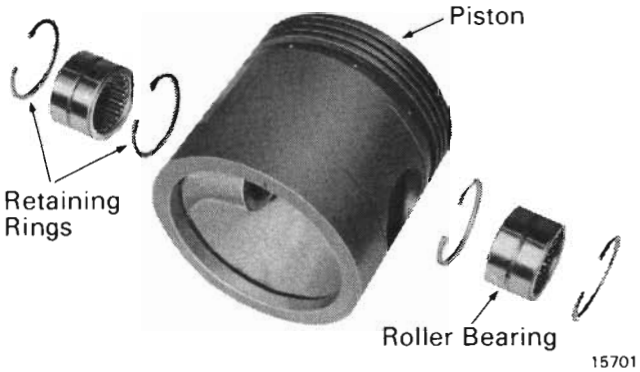

Fig.16 - Piston Pin Roller Bearing Application

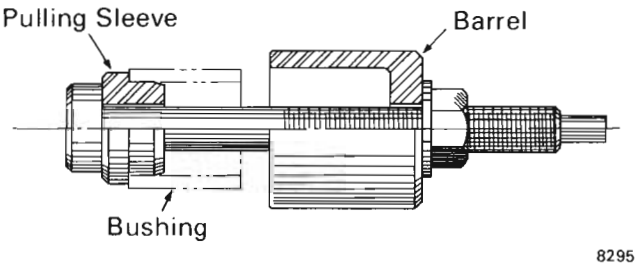

Fig.17 - Piston Bushing Removal Tool

Before attempting to replace the piston bushings, check the piston to see that it is sound and free from excessive scuff marks or wear at the following points:

1. Piston ring grooves must be square and free from wear ridges. Clearances between ring side and groove should not exceed maximum indicated in Service Data.

2. Piston to cylinder clearance must be within limits indicated in Service Data.

3. Minor scuff marks or scratches can be smoothed or rounded with a file. (Do not use stone or emery cloth.)

New bushings should be applied by shrinking the bushing with dry ice or liquid nitrogen and heating the piston. The use of liquid nitrogen will permit dropping bushing into piston at room temperature. The use of dry ice will require heating piston to 90° to 150° C (200° to 300° F). Bushing should be dropped into outside opening of piston boss with inner end of boss squarely seated on piston bushing anvil 8231756, Fig. 18.

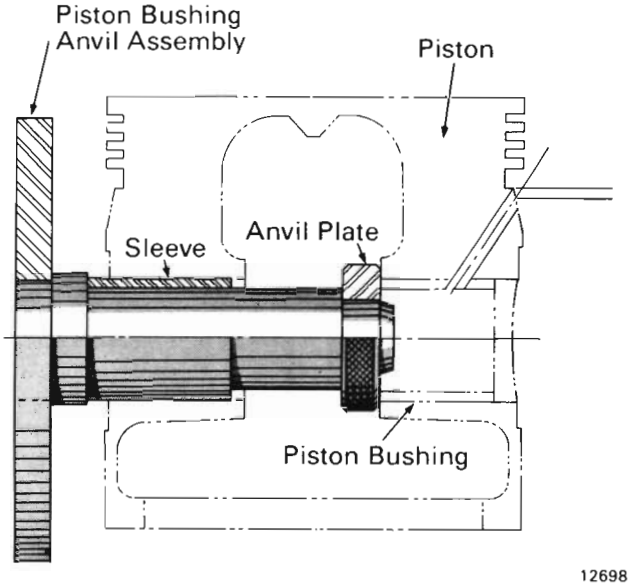

Fig.18 - Piston Pin Bushing Installation

High Pressure Piston

When replacing high pressure piston pin bearings, use roller bearing assemblies, Fig. 16. Those machines which did not previously have roller bearing assemblies will require a different piston, piston pin, and connecting rod.

The old bearings should be removed by pressing to the center of the piston with a 51 mm (2-1/32") diameter driving tool. Use care not to gouge the inside of the piston bosses with the driving tool.

A piston boss support anvil and plug for pressing in the roller bearings can be made as shown in Fig. 19.

Before attempting to replace the piston bearings, check the piston to see that it is sound and free from excessive scuff marks or wear at the following points:

1. Piston ring grooves must be square and free from wear ridges. Clearance between ring side and groove should not exceed the maximum indicated in Service Data.

2. Piston to cylinder clearance must be within limits indicated in Service Data.

3. Minor scuff marks or scratches can be smoothed or rounded with a file. (Do not use stone or emery cloth.)

4. Wash piston thoroughly to remove any foreign material, then blow it dry with clean, dry air.

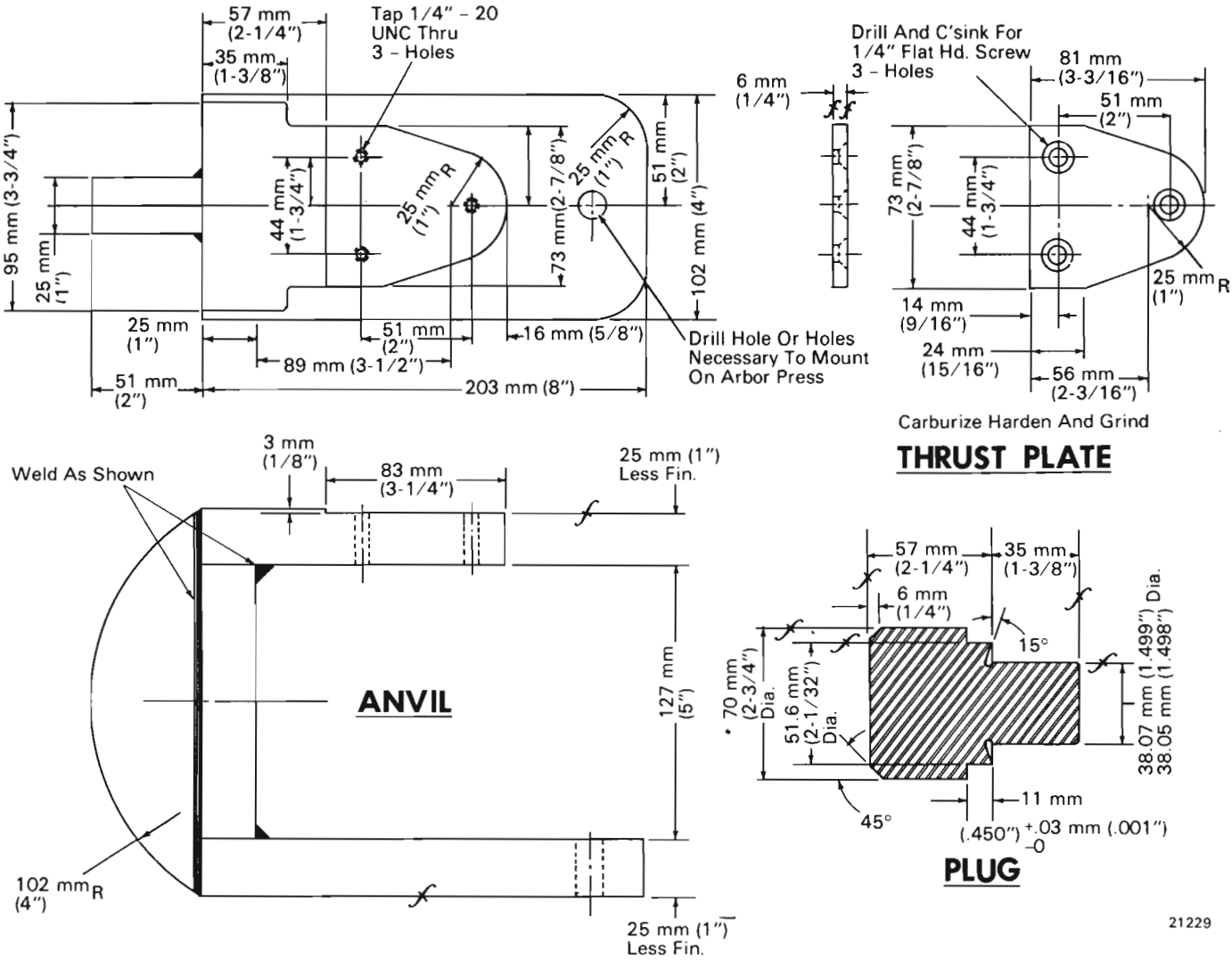

Fig.19 - Piston Boss Support Anvil

5. Install inner retainer rings in piston pin boss using internal pliers.

6. Place piston over anvil, Fig. 20, locating piston pin boss approximately in the center of the three countersunk screws in the top of the anvil.

7. Place roller bearing on plug and start bearing into piston pin bore, being sure bearing is parallel with pin bore.

8. Press bearing into piston until plug bottoms on the O.D. of the piston. Do not overpress plug.

9. Remove plug, rotate piston 180° and relocate the other piston pin boss on the anvil. Repeat Steps 7 and 8.

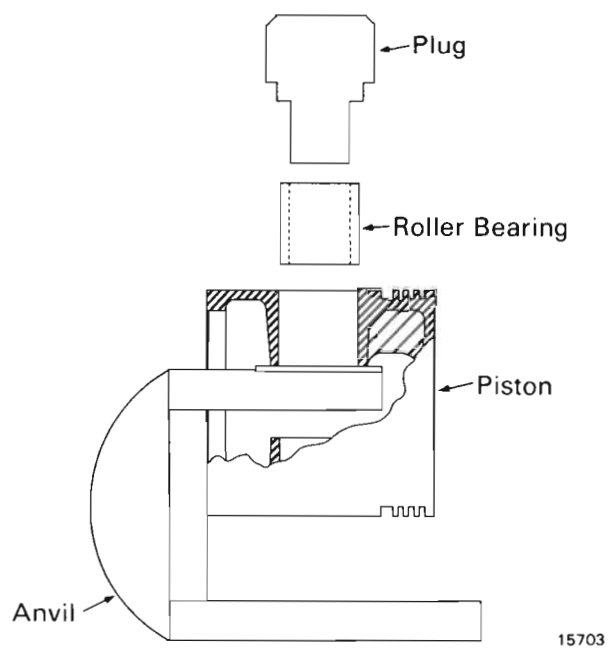

Fig.20 - Roller Bearing Installation

10. After both bearings have been installed, remove the piston from anvil and install the two outer retainer rings.

11. Cover both ends of the piston pin bore to keep foreign material out of the bearings until the piston pin is installed.

PISTON PIN REPLACEMENT

The piston pin must be replaced if it is scored, damaged, or exceeds clearance limits given in the Service Data. A special tool is available for piston pin and connecting rod assembly, Fig. 21. This assembly fixture 8213878 ensures proper alignment of the piston pin and connecting rod and prevents twisting the connecting rod when torquing the retaining bolt to the recommended 108-136 N·m (80-100 ft-lbs). It also positions the rod eye with the slot machined in the wrist pin for application of the retaining bolt.

Connecting rod spreader 8214312, also shown in Fig. 21, is used to expand the wrist pin bore of the connecting rod so it may be aligned in the piston assembly fixture without the use of force, which might damage the assembly.

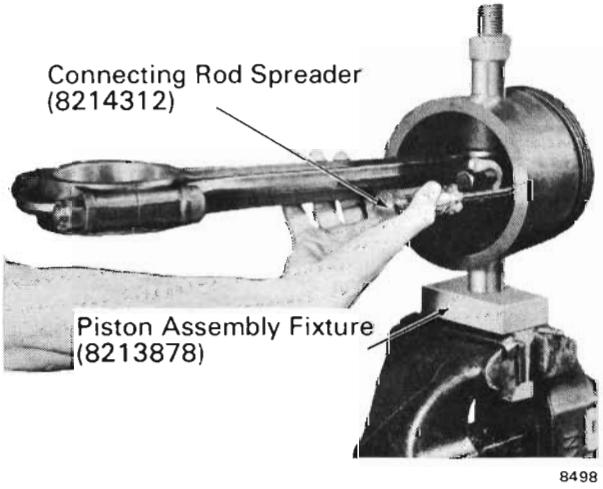

Fig.21 - Piston Assembly Fixture And Rod Spreader

PISTON RINGS

To aid in piston ring identification and location, the various ring combinations for the compressor are shown in Fig. 22. Compression rings are marked on top with a pip or dimple to ensure proper application. Oil control rings are not marked as they may be applied with either side up.

Particular notice should be made of the ring and spring combination used in the low pressure cylinder. This spring and ring combination is applied to the top and No. 2 ring grooves of the piston, with the spring above the ring.

NOTE

Ring side clearance limits given in the specifications do not apply to the spring and ring combination. Oil control rings are used in the bottom piston ring groove of all compressor pistons.

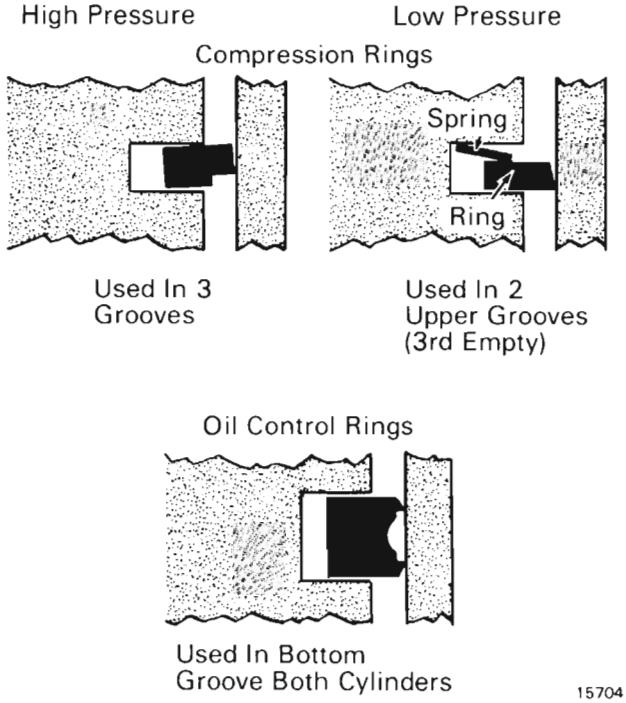

Fig.22 - Piston Ring Assembly

To properly apply the piston rings, use the correct ring expanding installing tool according to the piston diameter. See the Service Data for the correct ring expanders.

Standard size rings should be used on all standard pistons for all bore sizes up to where a 0.25 mm (.010") oversize piston can be used. Piston rings should be fitted through the bottom of the cylinders rather than through the top, because the bottom of the cylinder is chamfered to prevent damage to the ring on entry, and this end wears less than the top. Therefore, rings must have at least minimum clearance at the lower end of the cylinders. Piston rings should never be filed to obtain end clearance.

OIL PUMP

PLUNGER-TYPE PUMP

The oil pump should fit the crankshaft to the limits listed in the Service Data. If the clearance limit is

exceeded, a new oil pump eccentric will be required. The oil pump plunger should be inspected for scoring and excessive wear. If the clearance limit is exceeded as given in the Service Data, a new pump assembly should be installed.

GEAR-TYPE PUMP

The backlash in the oil pump drive is fixed by dowel pins in the oil pump mounting flange. The endplay in the oil pump drive shaft should be not less than 0.03 mm (.001″) or more than 0.10 mm (.004″). It is obtained by pulling up on the adjusting nut until this endplay is 0.05 mm (.002″) to 0.13 mm (.005″), then advancing the nut to the nearest locking position. If the clearance limits are exceeded as given in the Service Data, a new pump should be installed.

When converting a unit from plunger-type pump to gear-type pump, the oil pump mounting flange will have no dowel pins to fix the oil pump backlash. The backlash between the oil pump gears should be between .002″ to .004″. Complete retrofit details are given in M.I. 9621.

OIL PRESSURE RELIEF VALVE

The oil pressure relief valve should be completely disassembled and thoroughly cleaned. All passages should be blown out, using compressed air. The valve should then be reassembled and reset as described in the Lubricating System section.

PRESSURE GAUGES

The orifice screw should be removed and the air and oil pressure gauges tested on a dead weight tester. After testing, an orifice screw having an orifice diameter not greater than 0.38 mm (.015″) must be installed in the gauge and staked securely in place.

COMPRESSOR REASSEMBLY

The air compressors should be assembled with new gaskets and oil seals. The bearing surfaces of the crankshaft, main bearings, connecting rod bearings, wrist pins, and cylinders should be adequately lubricated with approved air compressor oil, as recommended in Maintenance Instruction 1756.

The area of the crankshaft that the lip of the synthetic rubber seal touches should be well oiled or greased.

1. On compressors equipped with plunger-type oil pump, install the oil seals in the end plates as explained in the "Crankshaft" section of this publication. On models equipped with gear-type oil pump, Fig. 23, first install the oil introducing ring, piston rings, and retainer rig in the end plate, making sure that the retainer ring snaps firmly in place. Then install the oil seals.

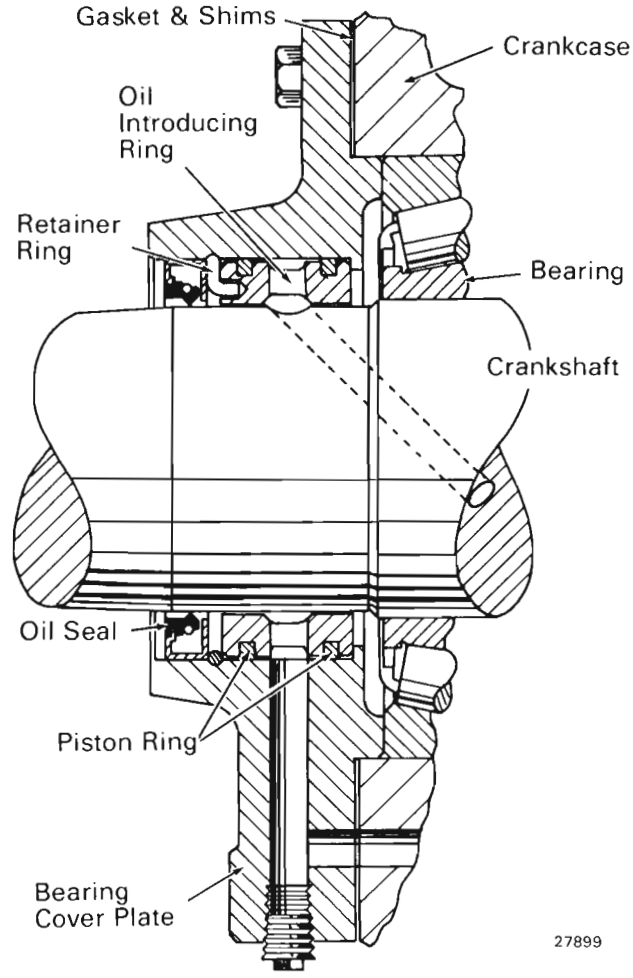

Fig.23 - Gear-Pump Compressor Oil Introducting Assembly

2. Mount the main bearing inner races on the crankshaft and the outer races in the crankcase (oil pump end) or the end plate (opposite oil pump end). The races must be flat against the locating shoulder within 0.05 mm (.002″).

3. Install the crankshaft in the crankcase with a gasket behind the end plate opposite the intercooler and shims at the intercooler so the oil pocket and passage is up, providing gravity feed lubrication to the main bearings.

NOTE

If leather type oil seals are used, oil seal guide 8219901 should be employed when sliding the leather type oil seals over the shaft keyway and shoulder on the shaft. Any burr will destroy the feather edge of the oil seal.

4. Check the end thrust of the crankshaft by exerting 1724 kPa (250 psi) pressure alternately at each end of the shaft and checking shaft movement with a dial indicator. Thrust clearance should not exceed the limits given in the Service Data. If necessary the end thrust may be adjusted by the addition or removal of shims between the end plate and crankcase.

5. Install the plunger-type oil pump and oil pump eccentric in the crankcase. Torque the eccentric strap bolts to 47-61 N·m (35-45 ft-lbs). Install cotter pins in the strap bolts and lockwire the oil pump mounting bolts.

   Install the gear-type oil pump. Torque the mounting flange bolts to 62-74 N·m (45-55 ft-lbs).

NOTE

The identifying or matching marks on the connecting rods, connecting rod caps, and both halves of the oil pump eccentric (plunger-type pump only) must all be on the same side.

6. Install the previously assembled piston and connecting rod assembly on crankshaft. Torque connecting rod bolts to 197-210 N·m (145-155 ft-lbs). Install locknut hand tight against connecting rod nut and tighten 1/3 to 1/2 turn.

NOTE

When installing the cylinders, cylinder heads, and intercooler to the compressor, be sure to use the proper gaskets and initially tighten the bolts hand tight. To limit the cylinder distortion to a minimum the mounting bolts should be tightened to the proper torque value as specified in the Service Data in the following order:

Intercooler to cylinder head.
Cylinder head to cylinder.
Cylinder to crankcase.

7. Using a piston ring compressor, mount the cylinders on the crankcase.

8. The following steps should be taken before installing the cylinder heads to the cylinders to ensure maximum operating performance of the cylinder head gaskets.

   a. Gasket surfaces on cylinder and heads must be free of deep scratches and foreign material. The faces of the water cooled heads must be flat within 0.05 mm (.002").

   b. Gaskets should be dipped in or coated with light motor oil prior to application, to permit flow of gasket and complete sealing. Use of heavy grease, gasket cements, or graphite coatings should be avoided as they impair gasket performance and life. Proper positioning of gasket should be attained by using short studs inserted in head before application.

9. The valve covers on the discharge valves, and the unloader on the high pressure suction valves should be installed with the valve clamp screws released. After the covers are installed, the valve clamp screws should be tightened and locked in place with the clamp screw crown nut. On the low pressure suction unloader assemblies, care should be exercised to ensure that the suction valve cover gasket is compressed. If the gasket does not compress, two gaskets should be applied. Do not remove the valve seat gasket.

10. Mount the cylinder head assemblies containing the suction and discharge valves, onto the cylinders.

11. Install the intercooler, then tighten the intercooler, cylinder head, and cylinder mounting bolts as explained in Step 6. Tighten cylinder head bolts to 163-176 N·m (120-130 ft-lbs) following the pattern in Fig. 24.

12. Install the safety valve, suction and discharge elbows, air filter, crankcase breather, oil pressure relief valve, and oil filter, (if applicable) in their proper locations.

13. If the unloader piping is in good condition, it should be reused. If new unloader piping is required, the latest type should be used. The piping should be soap tested for leaks at 620 kPa (90 psi).

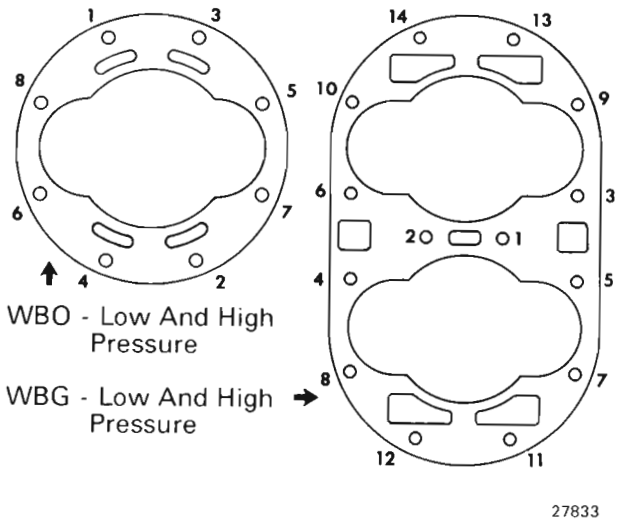

Fig.24 – Cylinder Head Tightening Sequence

14. If unit has water deflector piping, Fig. 25, install the piping such that the deflectors at the high pressure cylinders are positioned with the word "TOP" stamped on the deflector, on the top side. If the unit has the new reduced sludge, low pressure cylinders, Fig. 26, reapply the water piping. These new units do not require a sediment removal system.

15. Wipe the crankcase clean with lint-free, bound-edge towels and install the handhole covers. If the oil gauge and oil filter were removed from the handhole cover, replace them in their proper positions.

COMPRESSOR BREAK-IN AND TESTING AFTER OVERHAUL

Where a customer has many air compressors to break-in and test, it is recommended that a test stand be set up. Drawings covering such an installation will be furnished on request. File Drawing No. 343 covers a schematic piping diagram for an air compressor test stand, and File Drawing No. 603, an air compressor test stand arrangement. If access to a compressor test stand is not possible, the compressor may be tested on the locomotive.

PRELIMINARY TEST PROCEDURES

Whether the compressor is to be mounted on a test stand, Fig. 27, or tested in the locomotive, the following steps should be taken before starting test: Insert a temperature gauge in the pipe plug hole in the crankcase to check temperature rise of lube oil. A 10°-150° C (50°-300° F) gauge can be used.

To provide means of relieving air pressure while testing compressor on locomotive, the compressor discharge relief valve (if so equipped) should be removed and a globe valve installed. Flexible tubing or armored hose can be attached to the valve and placed so that air and vapors will discharge outside the engineroom.

As soon as the compressor is started, either on the test stand or in the locomotive, the lube oil pressure should be approximately 310 kPa (45 psi) with cold oil. As the oil temperature increases, the pressure will drop. The oil pressure should be adjusted to 103 kPa - 137 kPa (15-20 psi) with oil temperature at about 60° C (140° F) at 315 RPM.

COMPRESSOR TEST BREAK-IN RUN

Before the final test runs, the compressor should be given a break-in run for 30 minutes at 425 RPM pumping against a maximum of 69 kPa (10 psi) air pressure. On the test stand, a 50.8 mm (2") globe valve is used to exhaust the air being pumped and on the locomotive the newly installed globe valve and other air drains can be used. If this does not exhaust sufficient air to keep the pressure at 69 kPa (10 psi), the automatic brake valve can be moved to the full release position.

After the half hour break-in, close drain valve(s) and let main reservoir air pressure build up to normal cutout setting of the unloader governor or compressor control switch. Repeat several times to make sure suction unloading valve parts and unloader governor or compressor control switch are operating correctly. If any valve fails to unload properly, shut down the compressor and repair the defect.

FINAL TEST RUNS

Set unloader governor or compressor control switch to cut out at 689 kPa (100 psi) and cut in at approximately 620 kPa (90 psi). Open drain sufficently so that compressor operates at 50% load factor (i.e., unloaded for the same amount of time that it is loaded), and run for 2 hours at 425 RPM.

Following the first 2 hour final run, reset unloader governor to cut out at normal operating pressure. Operate at 50% load factor under these normal pressures for an additional 2 hours at a compressor speed of 425 RPM.

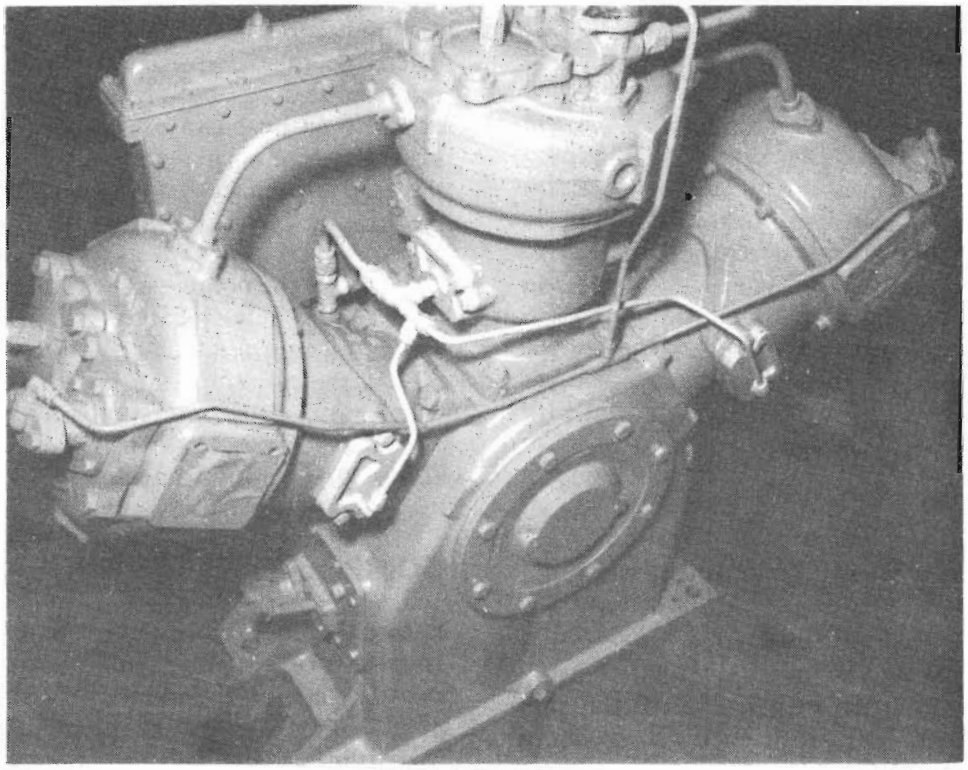

21231

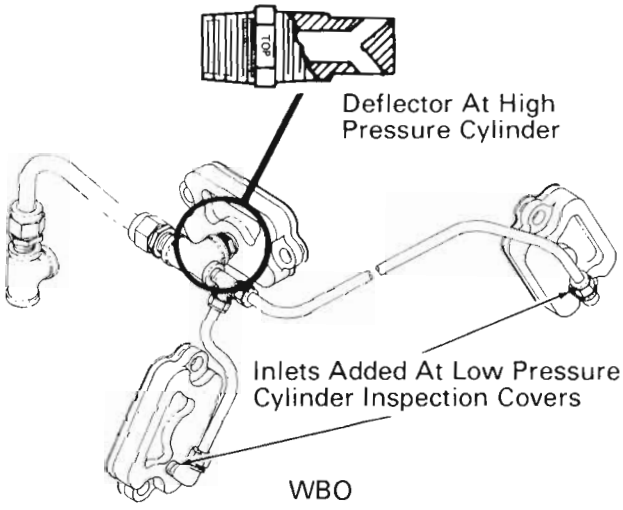

20261

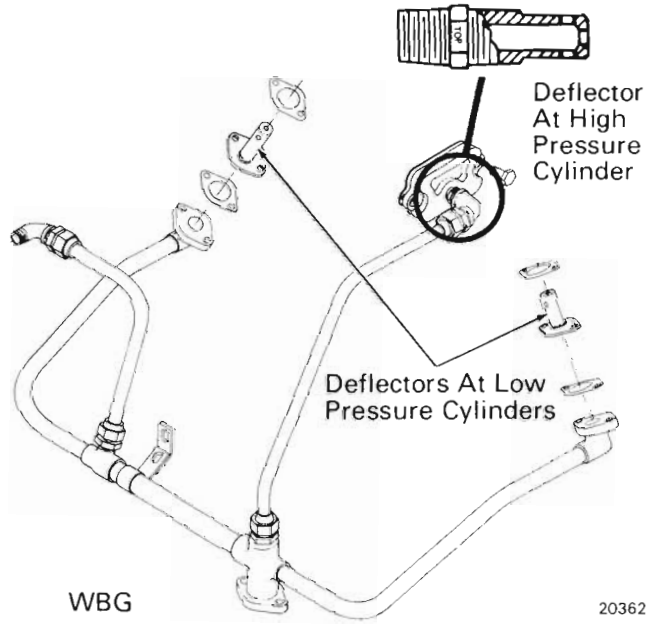

20362

Fig.25 – Water Deflector System Applied To Earlier Units

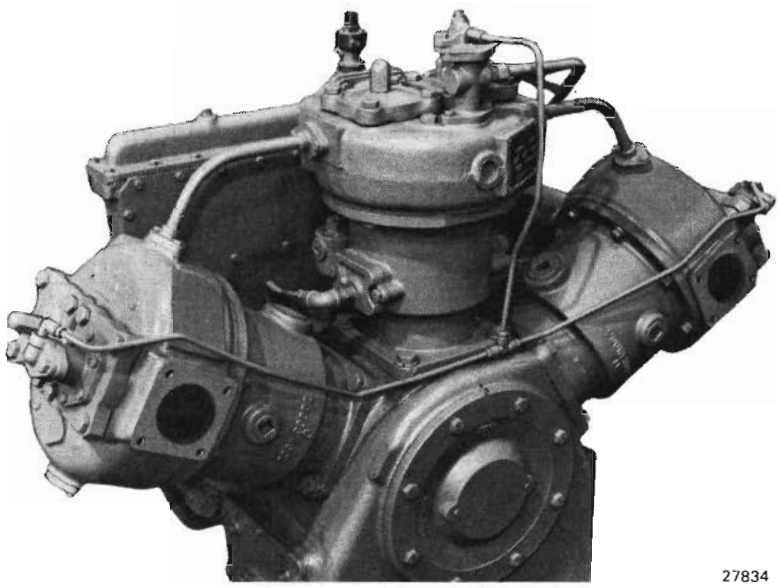

27834

Fig.26 – Typical Water Piping Application
(Basic Low Sludge Cylinders)

5720

Fig.27 – Typical Test Stand Installation

OPERATING TESTS

Audio inspections of moving parts should be made at regular intervals during the break-in period. If any noise (other than the normal valve click) is apparent, or a regularly occurring thump can be felt by placing hand on compressor, the cause of the noise or vibration should be corrected before attempting any further testing.

The intercooler pressure, observed during a test run while under load, should be near 380 kPa (55 psi). This pressure is an indicator of valve efficiency. The pressure may vary slightly due to change in air temperature or barometric pressure, but any variation of more than 20 kPa (3 psi) above or below normal intercooler pressure is an indication of a defective valve(s), the location of which can be found as follows:

1. If intercooler pressure is abnormally high only when pumping, the high pressure suction valve should be inspected.

2. If the intercooler pressure climbs slowly when the compressor is unloaded, the high pressure discharge valve should be inspected.

3. If the intercooler pressure is abnormally low when pumping and drops to zero pressure in less than 3 minutes when unloaded, the low pressure discharge valves should be inspected.

4. If the intercooler pressure is abnormally low when pumping, but drops only a few pounds after being unloaded 3 minutes, the low pressure suction valves should be inspected.

The low pressure discharge valves or low pressure suction valves at fault will usually be indicated by a weak or erratic suction sound, abnormal blowback from air filter, or an excessively hot low pressure discharge valve cover plate.

The valves may then be replaced, and with the compressor running under load, all gasket joints should be tested for air leaks. This testing may be done with water applied to all gasket joints with an oil can.

After making sure that all valves are again working properly and that all joints are tight and free from leaking, the machine should be given an orifice test. See Fig. 6 for orifice test limits.

COMPRESSOR STORAGE

If the place of storage is near a sea coast or in a damp climate, it is recommended that the compressor be given a 1 hour 50% load factor test run every 20-90 days during the high humidity season to prevent minute rust areas forming on cylinders and valves. The experience obtained from other similar machinery in the same climate area will assist materially in establishing the optimum interval between storage period retest.

If the tested compressor is to be kept in storage for an indefinite length of time, it should be protected against rust. After slushing with anti-rust oil, wrap the breather cap and all safety valves with MIL-B-131 barrier material and seal with pressure sensitive tape.

If the compressor is to be immediately installed in a locomotive, the slushing with anti-rust oil will not be required.

After the compressor has completed the recommended running time and appears to be working satisfactorily, all valves should be removed and the cylinders inspected for scoring or scratches that might have occurred during assembly or break-in. Brown streaks in the cylinder should not be confused with scratches or scoring, as this is not an abnormal condition and these streaks disappear after the rings and the cylinders have had sufficient running to properly polish themselves together.

SERVICE DATA

SPECIFICATIONS

Lube Oil Capacity

	Shallow Sump	Deep Sump
WBO	11.63 Liter (3 Gal.)	39.75 Liters (10-1/2 Gal.)
WBG	17.03 Liter (4-1/2 Gal.)	68.14 Liters (18 Gal.)

Valve Rework Limits

	Millimeters		Inches	
Valve Seats	Min.	Max.	Min.	Max.
Difference between center boss and valve disc seat		0.25		0.010
Gasket surface flat within		0.13		0.005
Gasket seat width	3.18		0.125	
Valve Bumper				
Distance disc seat surface below center boss surface	3.56	3.96	0.140	0.156
Guide finger height must not be greater than center boss height.				
Valve Disc				
Thickness	1.32		0.052	
Lift	1.98	2.59	0.078	0.102

Dimensions For Rebuild — Low Pressure Cylinder

	Model WBO			
	Millimeters		Inches	
	Min.	Max.	Min.	Max.
Cylinder Height	288.544	288.925	11.3600	11.3750
Cylinder Inside Diameter				
New	200.025	200.063	7.8750	7.8765
*Maximum		200.139		7.8795
Piston Diameter				
New	199.898	199.923	7.8700	7.8710
**Minimum	199.809		7.8665	
Clearances –				
Piston To Cylinder				
New	0.102	0.165	0.0040	0.0065
Rebuild	0.102	0.216	0.0040	0.0085
Piston Pin	0.033	0.10	0.0013	0.004
Side of oil ring to groove	0.05	0.10	0.002	0.004
***Ring Gap	0.20	1.01	0.008	.040
	Model WBG			
Cylinder Inside Diameter				
New	177.800	177.838	7.0000	7.0015
*Maximum		177.914		7.0045
Piston Diameter				
New	177.686	177.711	6.9955	6.9965
**Minimum	177.597		6.9920	

Model WBG

	Millimeters Min.	Millimeters Max.	Inches Min.	Inches Max.
Clearances –				
Piston To Cylinder				
New	0.089	0.152	0.0035	0.0060
Rebuild	0.089	0.203	0.0035	0.0080
Piston Pin	0.033	0.10	0.0013	0.004
Side of oil ring to groove	0.05	0.10	0.002	0.004
***Ring Gap	0.18		0.007	

*Using new piston at maximum diameter.
**Using new cylinder at minimum diameter.
***Install new rings whenever it is necessary to remove rings from piston or cylinder.

Dimensions For Rebuild — High Pressure Cylinder

Model WBO

	Millimeters Min.	Millimeters Max.	Inches Min.	Inches Max.
Cylinder Height	272.669	273.050	10.7350	10.7500
Cylinder Inside Diameter				
New	146.050	146.088	5.7500	5.7515
*Maximum		146.164		5.7545
Piston Diameter				
New	145.948	145.974	5.7460	5.7470
**Minimum	145.859		5.7425	
Clearances –				
Piston To Cylinder				
New	0.076	0.140	0.0030	0.0055
Rebuild	0.076	0.191	0.0030	0.0075
Piston Pin	0.03	0.064	0.001	0.0025
Side of ring to groove	0.05	0.01	0.002	0.004
***Ring Gap	0.15	0.81	0.006	0.032

Model WBG

Cylinder Inside Diameter				
New	146.050	146.088	5.7500	5.7515
*Maximum		146.164		5.7545
Piston Diameter				
New	145.948	145.974	5.7460	5.7470
**Minimum	145.859		5.7425	
Clearances –				
Piston To Cylinder				
New	0.076	0.140	0.0030	0.0055
Rebuild	0.076	0.191	0.0030	0.0075
Piston Pin	0.03	0.064	0.001	0.0025
Side of ring to groove	0.05	0.10	0.002	0.004
***Ring Gap	0.15		0.006	

*Using new piston at maximum diameter.
**Using new cylinder at minimum diameter.
***Install new rings whenever it is necessary to remove rings from piston or cylinder.

General Clearance Data

	Millimeters		Inches	
	Min.	Max.	Min.	Max.
Main bearing outer race to crankcase bore or end plate	-0.03	+0.03	-0.001	+0.001
†Main bearing end (cold)				
Model WBO	0.20	0.33	0.008	0.013
Model WBG	0.26	0.38	0.010	0.015
Unloader assembly unloader plunger to upper plunger		0.10		0.004
††Connecting rod bearing	0.030	0.08	0.0012	0.003
†††Connecting rod side	0.33	0.76	0.013	0.030
Plunger-type oil pump				
Oil pump eccentric	0.03	0.08	0.001	0.003
Oil pump plunger to body	0.03	0.064	0.001	0.0025
Gear-type oil pump				
Rotor to housing		0.05		0.002
Idler pin to idler bushing		0.05		0.002
Idler to crescent		0.10		0.004
Oil pressure relief valve - clearance between valve body and piston	0.013	0.08	0.0005	0.003

†If end clearance is more than maximum limit, remove one 0.13 mm (.005″) shim and recheck.
††Do not file cap or rod or use shim stock to tighten. When maximum clearance is reached, install new inserts.
†††Total clearance for all rods on one crankpin.

Connecting Rod Parallelism And Twist

Connecting rod bores must be parallel within 0.041 mm (0.0016″) in 152 mm (6″).
Connecting rod twist must not exceed 0.041 mm (0.0016″) in 152 mm (6″).

EQUIPMENT LIST

	Part No.
Hone Set	8039177
Holder - Stone	
(Used with 8039177 hone set on high pressure cylinders)	8102249
Ring Expanders	
(5-3/4″ cylinder)	8205284
(7-7/8″ cylinder)	8205286
(7″ cylinder)	8205285
Piston Ring Guide	
(5-3/4″ cylinder)	8205491
(7-7/8″ cylinder)	8205493
(7″ cylinder)	8205492
Piston Assembly Fixture	8213878
Connecting Rod Spreader	8214312
Valve Holder	8214755
Oil Seal Guide	8219901
Piston Bushing Anvil	8231756
Piston Bushing Puller	8231757
Piston Bushing Groove Scraper	8231758
Lifting Eye-Bolt	8159760

TORQUE VALUES

Recommended torque values for air compressor fasteners are indicated in the charts that follow. These torque values are based on threads that are clean and free of burrs and grit. The cleaning solvent (if used) should have a trace of lubricant.

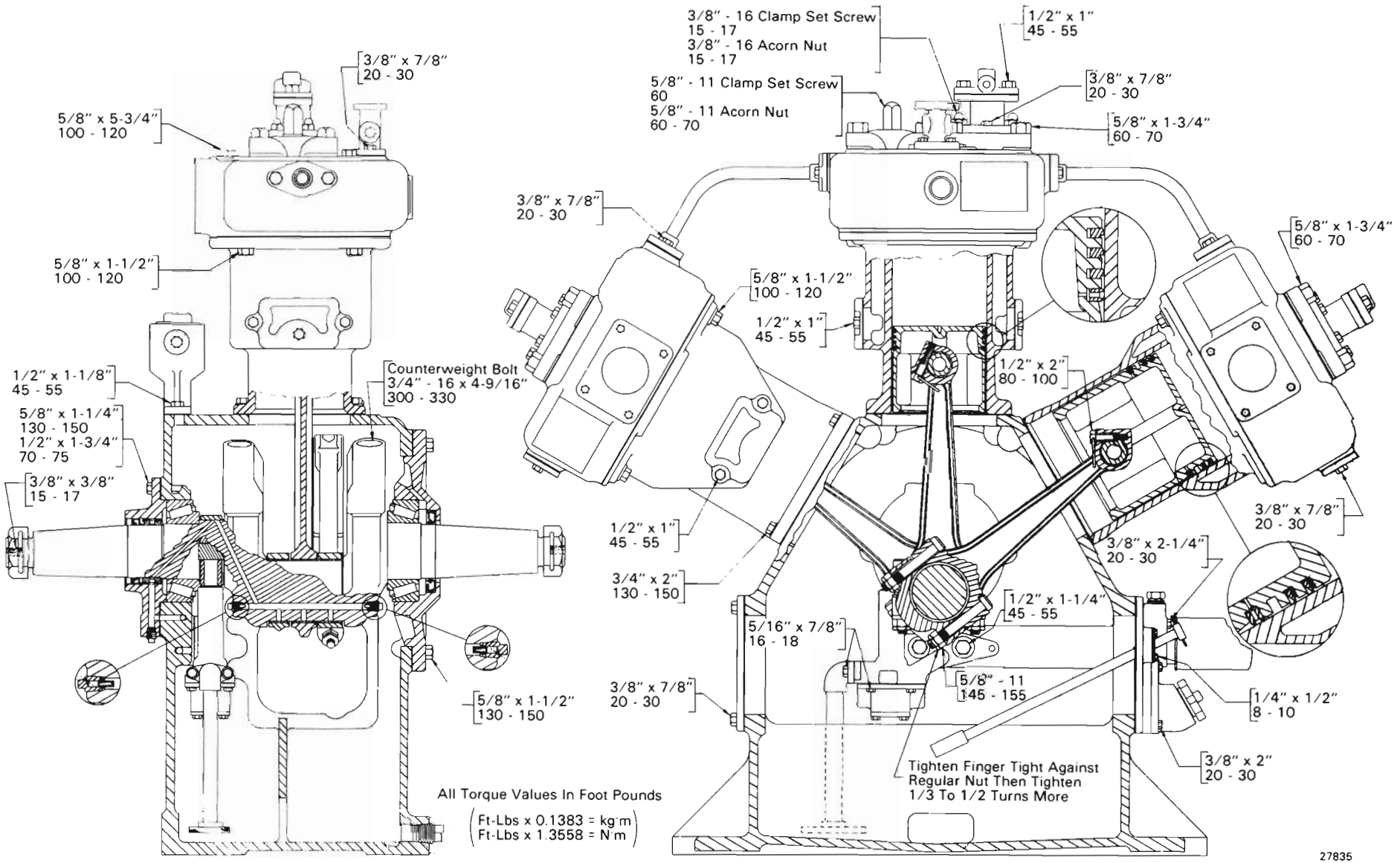

Torque Chart - WBO Complete With
Gear Type Lube Oil Pump

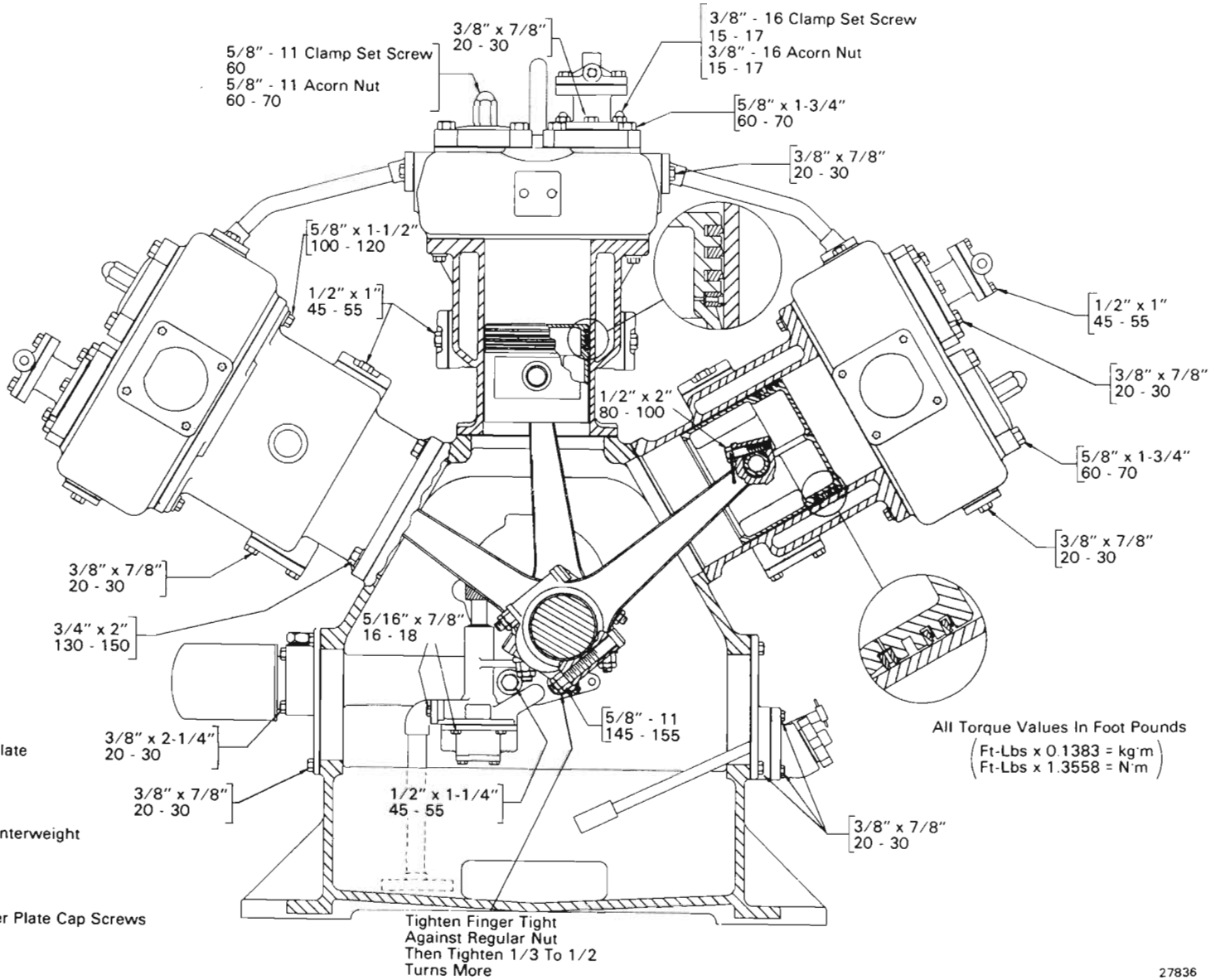

Torque Chart - WBG Complete With
Gear Type Lube Oil Pump

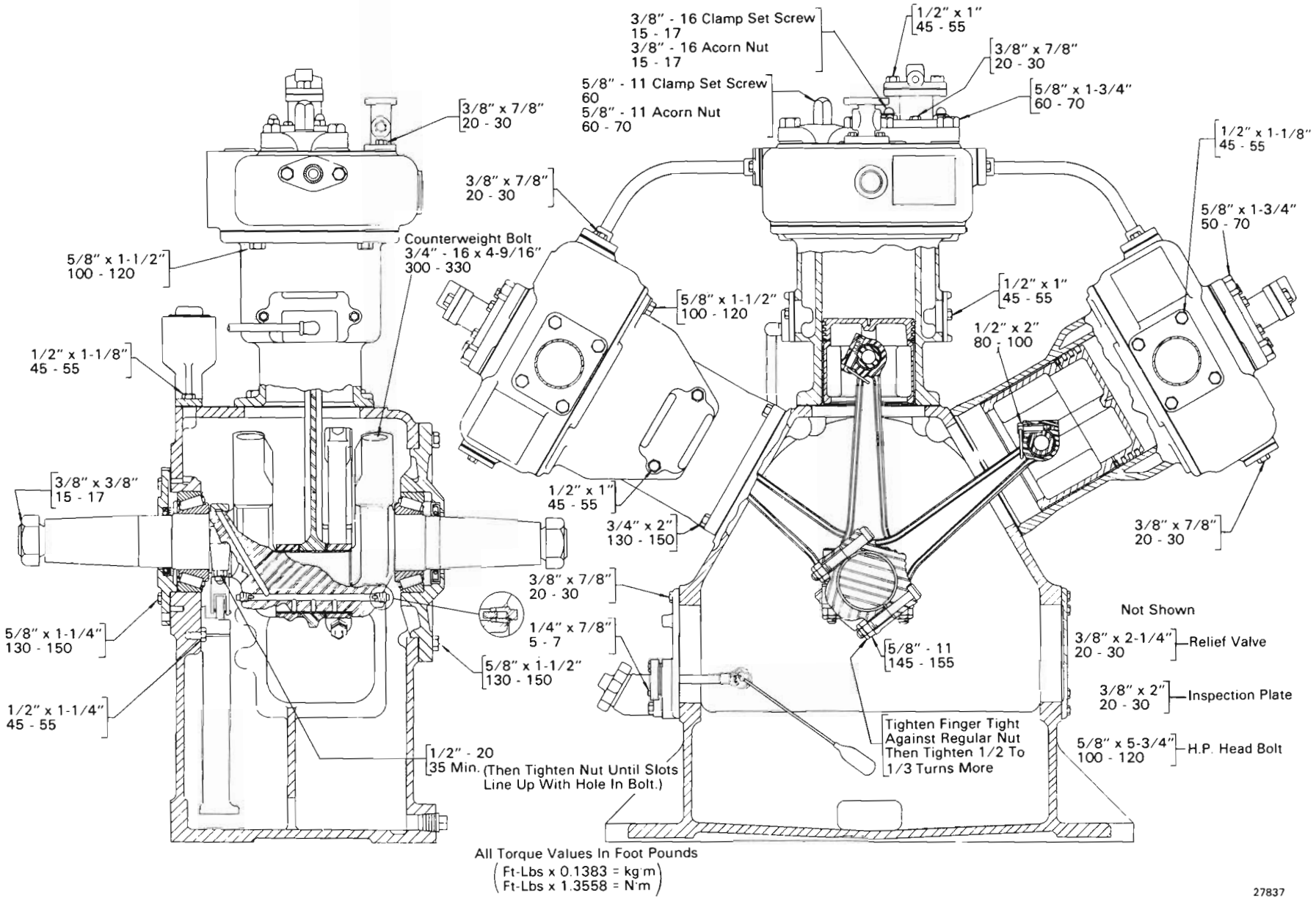

Torque Chart - WBO Complete With
Plunger Type Lube Oil Pump

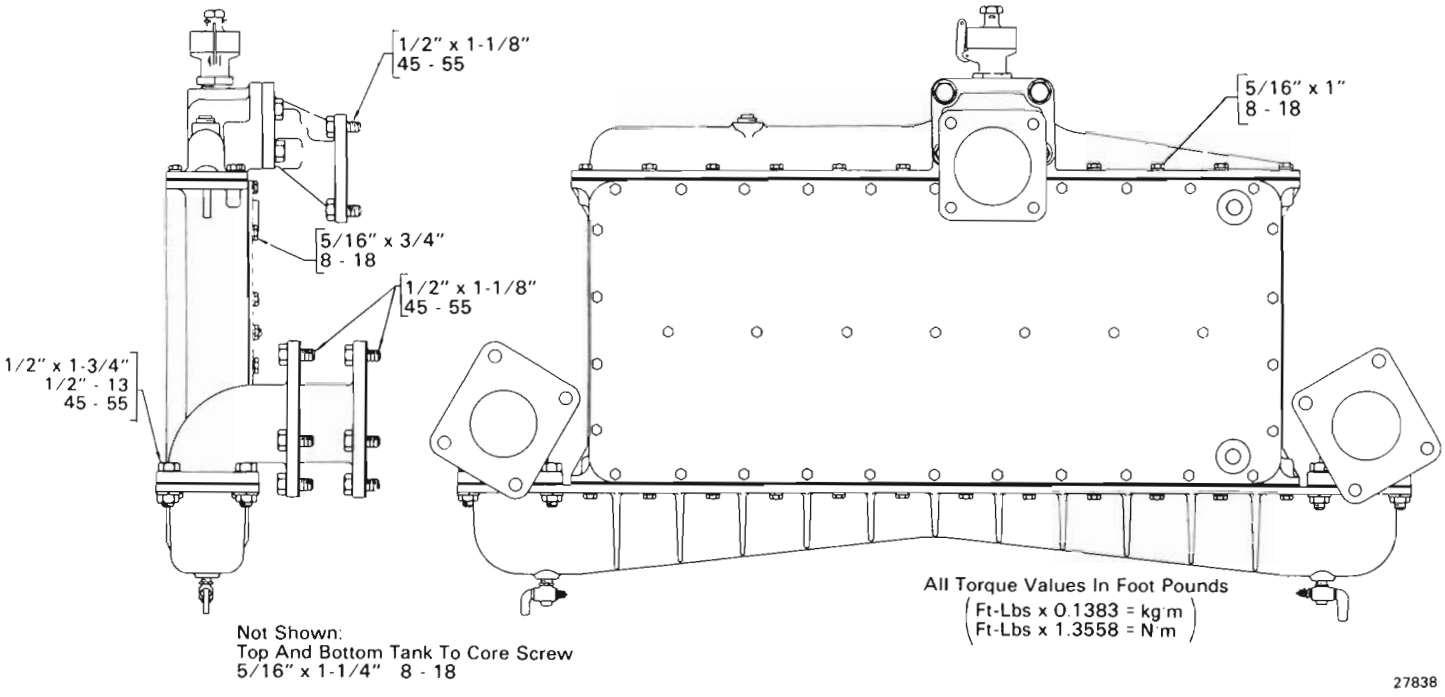

Intercooler Torque Chart